VK 315 EC U



Centrifugal inline fans in plastic casing with EC-motors

• Sound pressure level LpA at 3 m: 48
• Control: Built-in speed controller
• Impeller type: Centrifugal impeller with backward curved blades
• Casing material: Plastic
• Installation in any position
• Cable with mains plug
• Temperature sensor

	Unit of measurement	VK 315 EC U
Connected air duct size	mm	315
Phases	-	1
Minimum supply voltage	V	230
Maximum supply voltage	V	230
Power supply frequency	Hz	50/60
Rated power	W	165
Unit current	A	1.15
Maximum airflow	m³/h	1500
Rotation speed at 50hz	-	2500
Sound pressure level LpA at 3 m	dB(A)	48
Weight	kg	4.9
Transported air temperature (max)	°C	60
Transported air temperature (min)	°C	-25
Ingress protection rating	-	IPX4
Ingress protection rating of the drive	-	IP55
Impeller material	-	Plastic

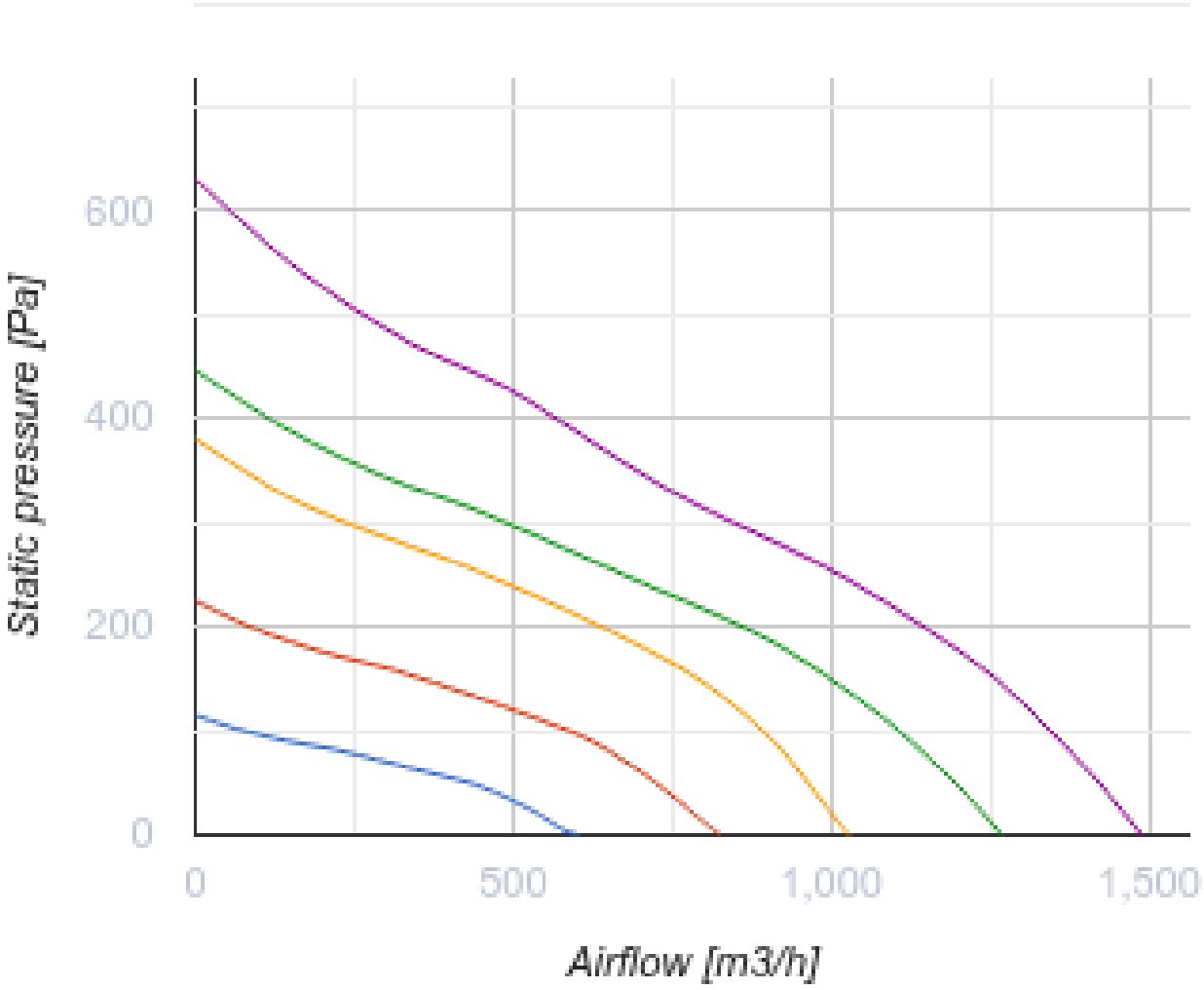

Dimensions

ØD	ØD1	B	L	L1	L2	L3
315	400	414	276	40	55	40

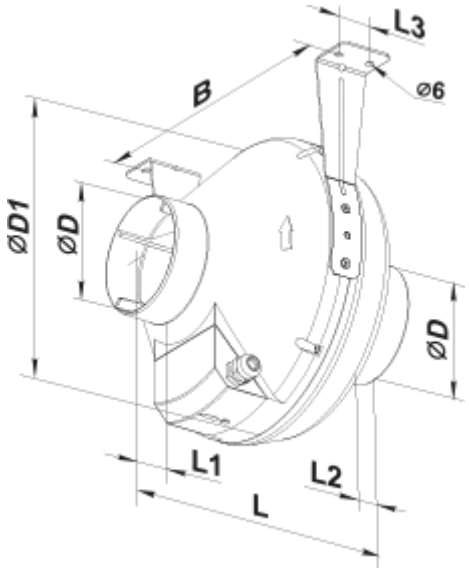
L3
B
ø6
ØD1
ØD
ØD
L1
L2
L