# VK 150 R1

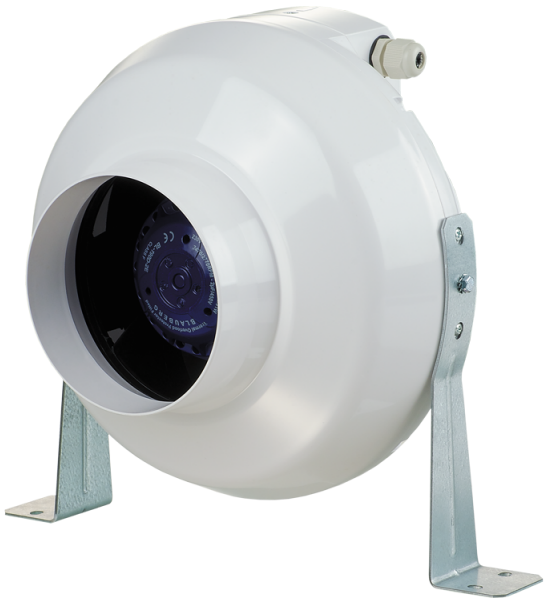

Centrifugal inline fans in plastic casing

• Sound pressure level LpA at 3 m: 42
• Impeller type: Centrifugal impeller with backward curved blades
• Casing material: Polypropylene
• Installation in any position
• Cable with mains plug

| | Unit of measurement | VK 150 R1 | |
|---|---|---|---|
| Connected air duct size | mm | 150 | |
| Phases | - | 1 | |
| Minimum supply voltage | V | 230 | |
| Maximum supply voltage | V | 230 | |
| Power supply frequency | Hz | 50 | 60 |
| Rated power | W | 65 | |
| Unit current | A | 0.29 | |
| Maximum airflow | $m^3/h$ | 460 | |
| Rotation speed at 50hz | - | 2725 | |
| Sound pressure level LpA at 3 m | dB(A) | 42 | |
| Weight | kg | 2.45 | |
| Transported air temperature (max) | °C | 55 | |
| Transported air temperature (min) | °C | -25 | |
| Ingress protection rating | - | IPX4 | |
| Impeller material | - | Plastic | |

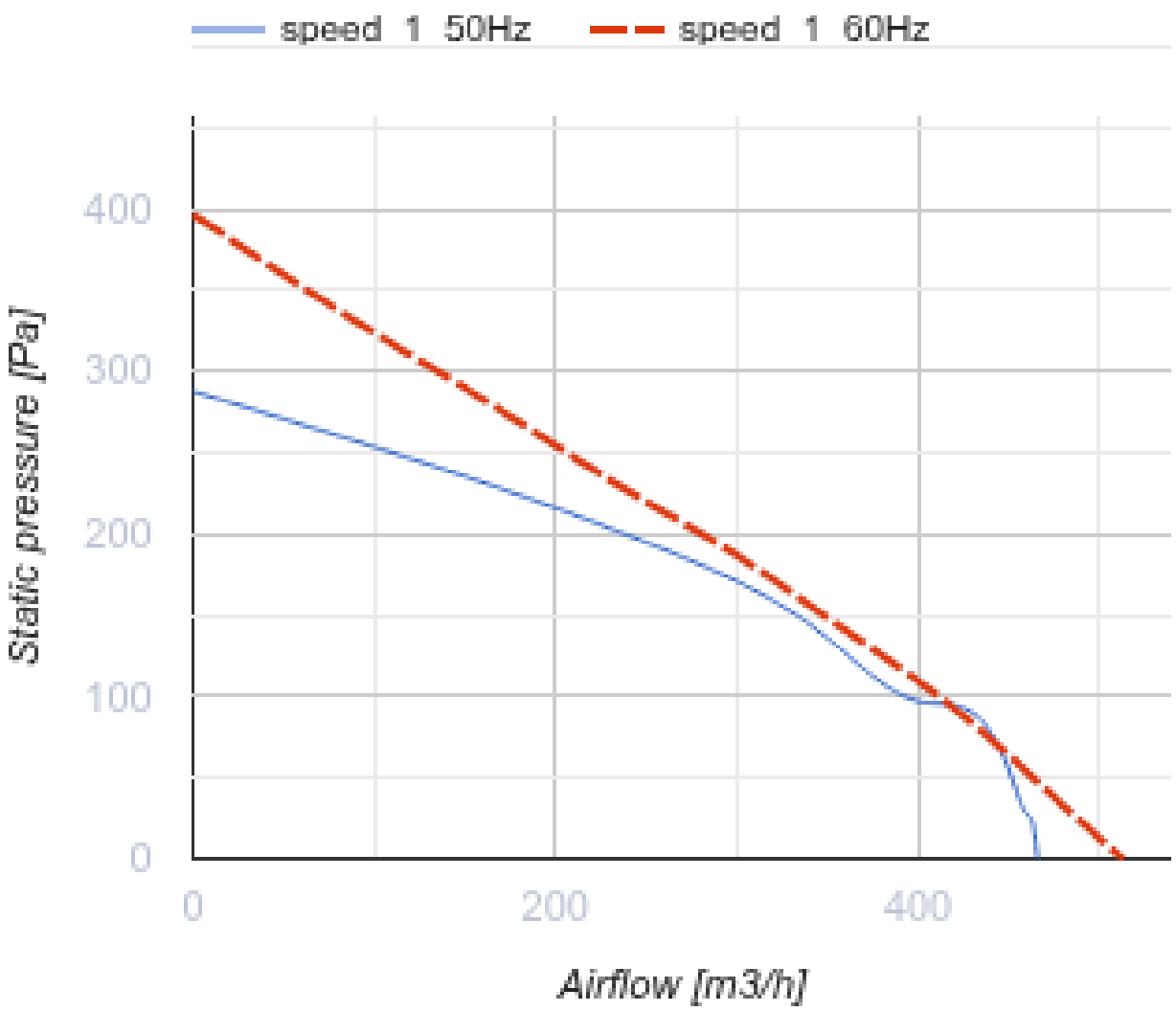
speed 1 50Hz
speed 1 60Hz
400
300
200
100
0
Static pressure [Pa]
0
200
400
Airflow [m3/h]

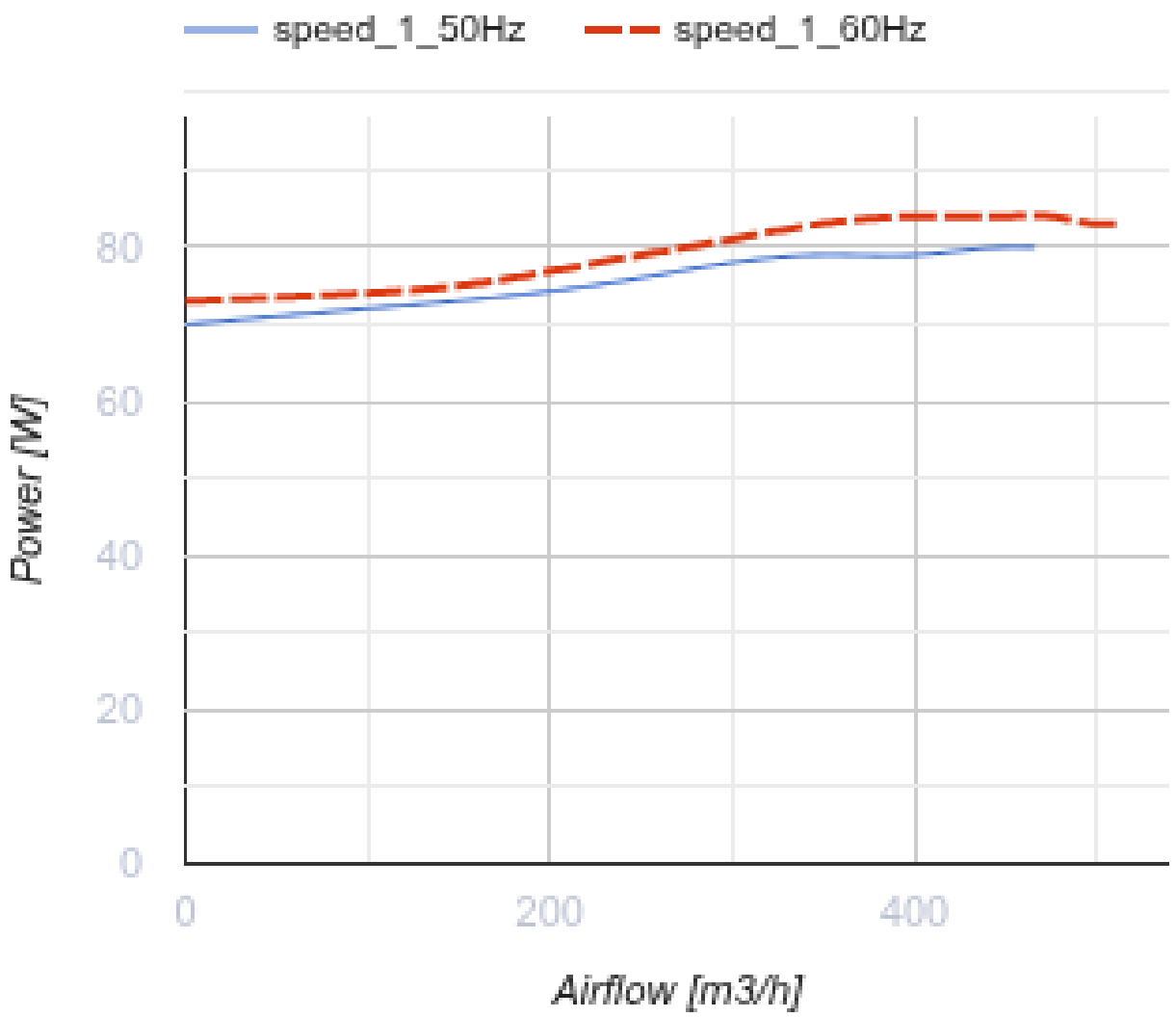


## Dimensions

| ØD | ØD1 | B | L | L1 | L2 | L3 |
|---|---|---|---|---|---|---|
| 150 | 300 | 310 | 286 | 30 | 30 | 30 |

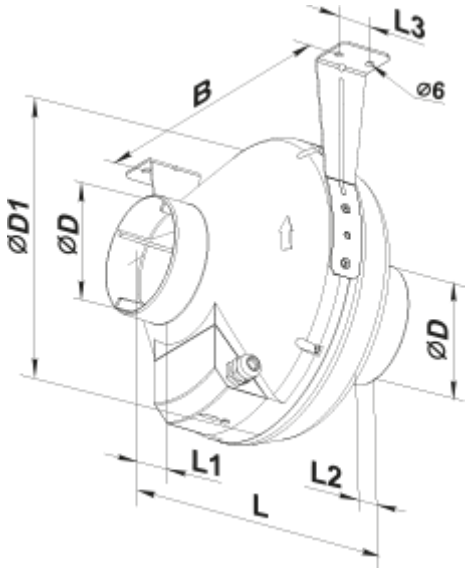
L3
B
ø6
ØD1
ØD
ØD
L1
L2
L

## Ecodesign

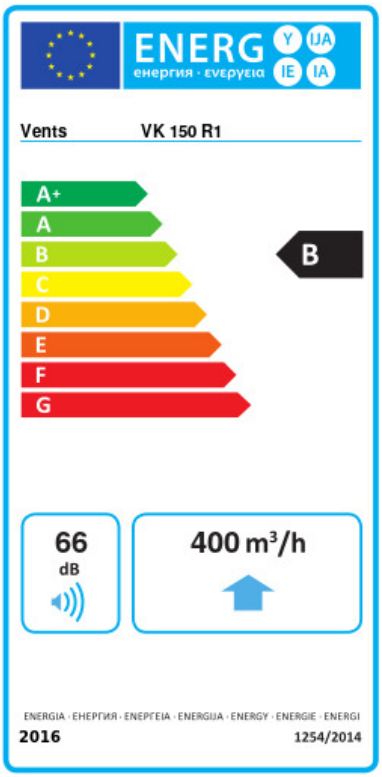


| Trademark | Vents | | | | | |
|---|---|---|---|---|---|---|
| Model | VK 150 R1 | | | | | |
| Specific energy consumption (SEC) (kWh/(m²/a)) | Cold | | Average | | Warm | |
| | -53.7 | A+ | -26.6 | B | -11.1 | E |
| Type of ventilation unit | Unidirectional | | | | | |
| Type of drive installed | Variable speed | | | | | |
| Type of heat recovery system | None | | | | | |
| Maximum flow rate (m³/h) | 400 | | | | | |
| Electric power input (W) | 80 | | | | | |
| Reference flow rate (m³/s) | 0.078 | | | | | |
| Reference pressure difference (Pa) | 50 | | | | | |
| Specific power input (SPI) (W/(m³/h)) | 0.129 | | | | | |
| Control typology | Local demand control | | | | | |
| Maximum external leakage rates (%) | 2.7 | | | | | |
| Declared typology | RVU UVU | | | | | |
| Sound power level (dB(A)) | 66 | | | | | |
| The annual electricity consumption (AEC) (kWh/a) | Cold | | Average | | Warm | |
| | 68 | | 68 | | 68 | |
| The annual heating saved (AHS) (kWh/a) | Cold | | Average | | Warm | |
| | 5536 | | 2830 | | 1280 | |