VK 125 EC U



Centrifugal inline fans in plastic casing with EC-motors

• Sound pressure level LpA at 3 m: 42
• Control: Built-in speed controller
• Impeller type: Centrifugal impeller with backward curved blades
• Casing material: Plastic
• Installation in any position
• Cable with mains plug
• Temperature sensor

	Unit of measurement	VK 125 EC U
Connected air duct size	mm	125
Phases	-	1
Minimum supply voltage	V	230
Maximum supply voltage	V	230
Power supply frequency	Hz	50/60
Rated power	W	84
Unit current	A	0.64
Maximum airflow	m³/h	420
Rotation speed at 50hz	-	3600
Sound pressure level LpA at 3 m	dB(A)	42
Weight	kg	2.2
Transported air temperature (max)	°C	60
Transported air temperature (min)	°C	-25
Ingress protection rating	-	IPX4
Ingress protection rating of the drive	-	IP55
Impeller material	-	Plastic

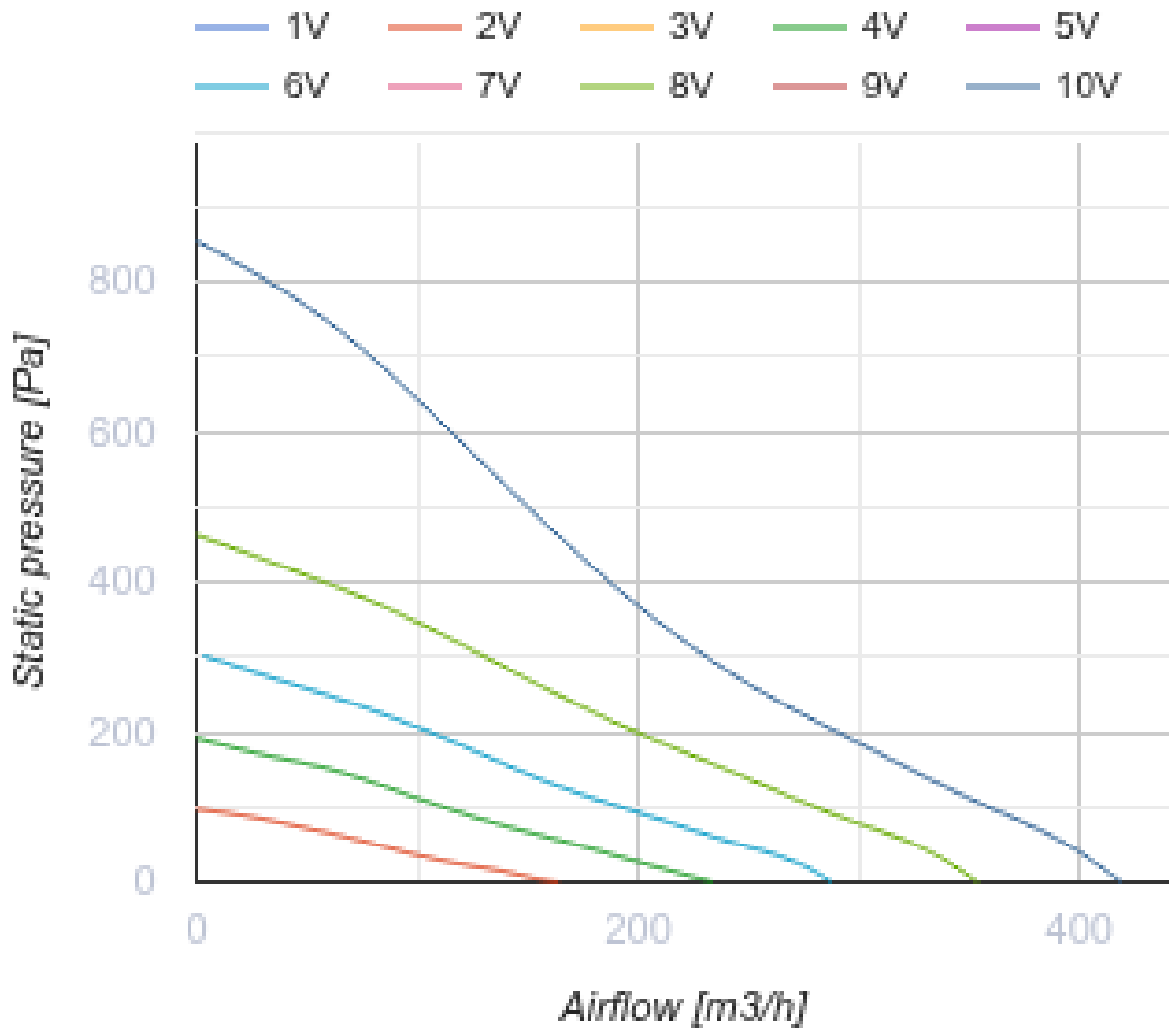
1V
2V
3V
4V
5V
6V
7V
8V
9V
10V
800
600
400
200
0
Static pressure [Pa]
0
200
400
Airflow [m3/h]

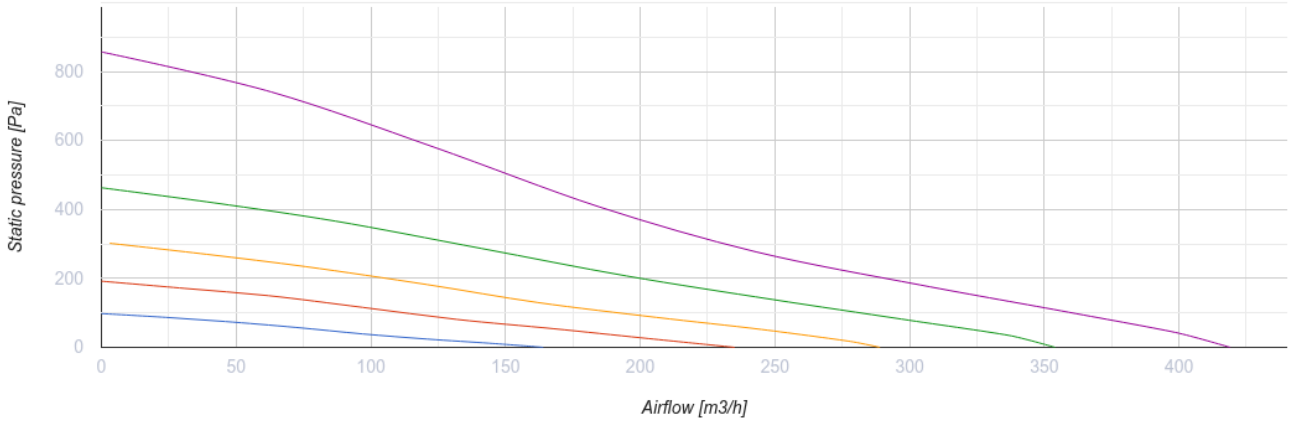
800
600
400
200
0
Static pressure [Pa]
0
50
100
150
200
250
300
350
400
Airflow [m3/h]

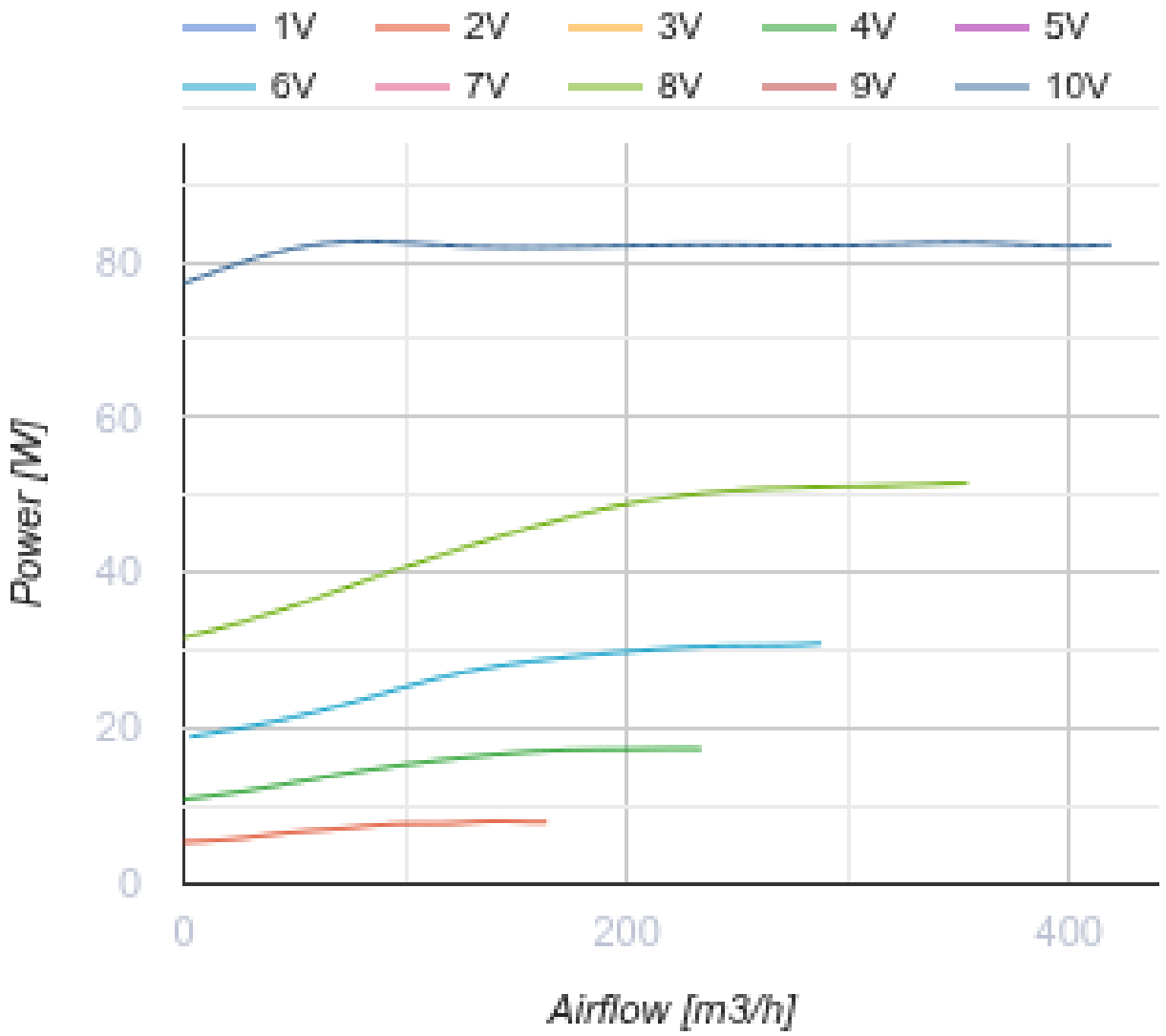

Dimensions

ØD	ØD1	B	L	L1	L2	L3
125	250	270	220	30	27	30

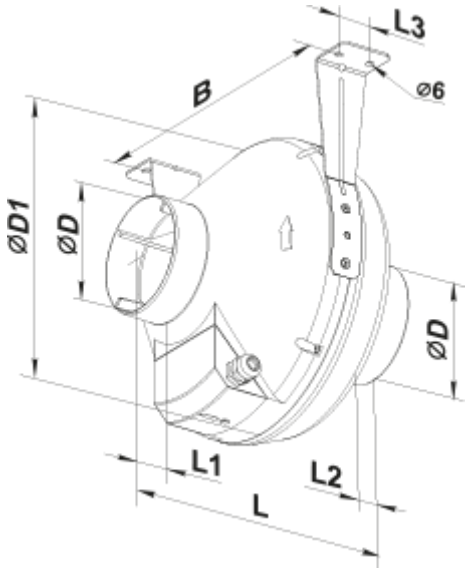
L3
B
ø6
ØD1
ØD
ØD
L1
L2
L

Ecodesign

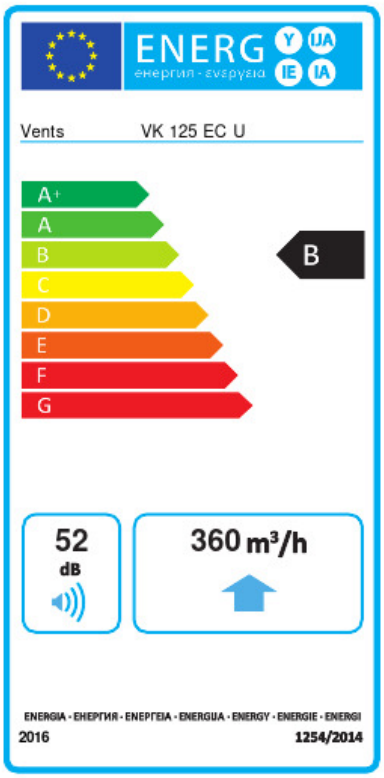

Trademark	Vents					
Model	VK 125 EC U					
Specific energy consumption (SEC) (kWh/(m²/a))	Cold		Average		Warm	
	-53.8	A+	-26.7	B	-11.2	E
Type of ventilation unit	Unidirectional					
Type of drive installed	Variable speed					
Type of heat recovery system	None					
Maximum flow rate (m³/h)	360					
Electric power input (W)	83					
Reference flow rate (m³/s)	0.069					
Reference pressure difference (Pa)	50					
Specific power input (SPI) (W/(m³/h))	0.12					
Control typology	Local demand control					
Maximum external leakage rates (%)	2.7					
Declared typology	RVU UVU					
Sound power level (dB(A))	52					
The annual electricity consumption (AEC) (kWh/a)	Cold		Average		Warm	
	64		64		64	
The annual heating saved (AHS) (kWh/a)	Cold		Average		Warm	
	5536		2830		1280	