VCUN 500x229-11,0-4 R90

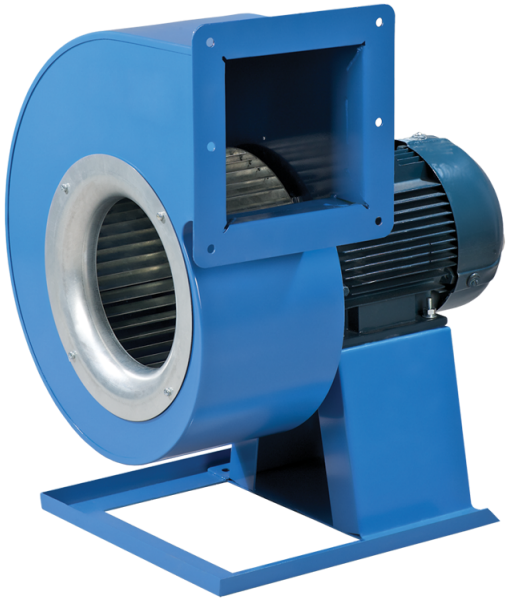

Radial fans

• Sound pressure level LpA at 3 m: 85
• Impeller type: Centrifugal impeller with forward curved blades
• Casing material: Coated steel

	Unit of measurement	VCUN 500x229-11,0-4 R90
Phases	-	3
Maximum supply voltage	V	400
Minimum supply voltage	V	400
Power supply frequency	Hz	50
Rated power	W	11000
Unit current	A	24
Maximum airflow	m³/h	17250
Rotation speed at 50hz	-	1450
Sound pressure level LpA at 3 m	dB(A)	85
Weight	kg	107
Transported air temperature (max)	°C	60
Ingress protection rating	-	IP54
Ingress protection rating of the drive	-	IP54
Impeller material	-	Galvanized steel

Dimensions

ØD	Ød	Ød1	B	H	H1	H2	H3	L	L1	L2	P	M	I	G	K	S
500	11	15	860	1115	390	341	534	761	401	353	408	500	645	42	580	178

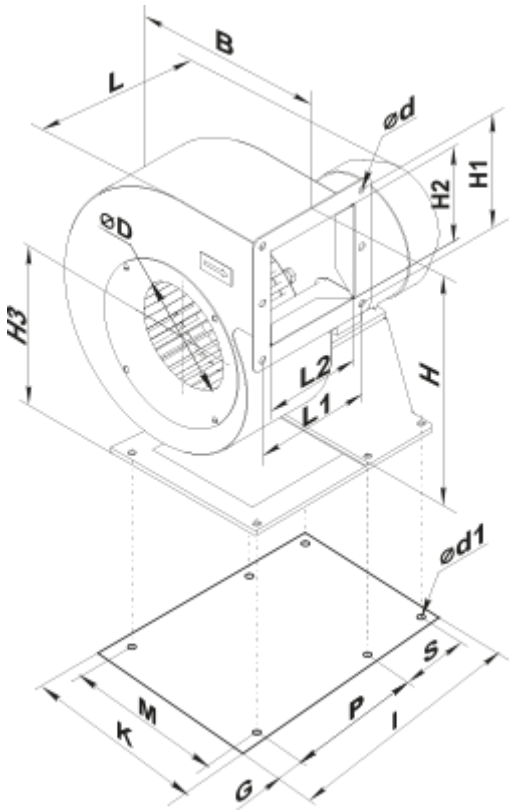

Accessories

Speed controllers

Name	Photo	Description
RSA5D-6,0-M		Three phase speed controller
RSA5D-8,0-M		Three phase speed controller
RSA5D-11,0-M		Three phase speed controller
RSA5D-12,0-M		Three phase speed controller