VCUN 250x127-5,5-2 R90

Radial fans

• Sound pressure level LpA at 3 m: 81
• Impeller type: Centrifugal impeller with forward curved blades
• Casing material: Coated steel

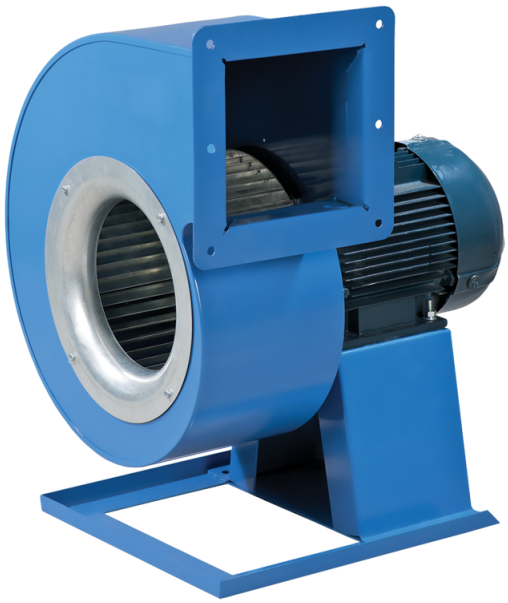

	Unit of measurement	VCUN 250x127-5,5-2 R90
Phases	-	3
Minimum supply voltage	V	400
Maximum supply voltage	V	400
Power supply frequency	Hz	50
Rated power	W	5500
Unit current	A	10.7
Maximum airflow	m^3/h	4820
Rotation speed at 50hz	-	2850
Sound pressure level LpA at 3 m	dB(A)	81
Weight	kg	40
Transported air temperature (max)	°C	60
Ingress protection rating	-	IP54
Ingress protection rating of the drive	-	IP54
Impeller material	-	Galvanized steel

Dimensions

ØD	Ød	Ød1	B	H	H1	H2	H3	L	L1	L2	P	M	I	G	K	S
250	10	12	431	614	202	168	312	517	202	166	213	300	397	27	355	140

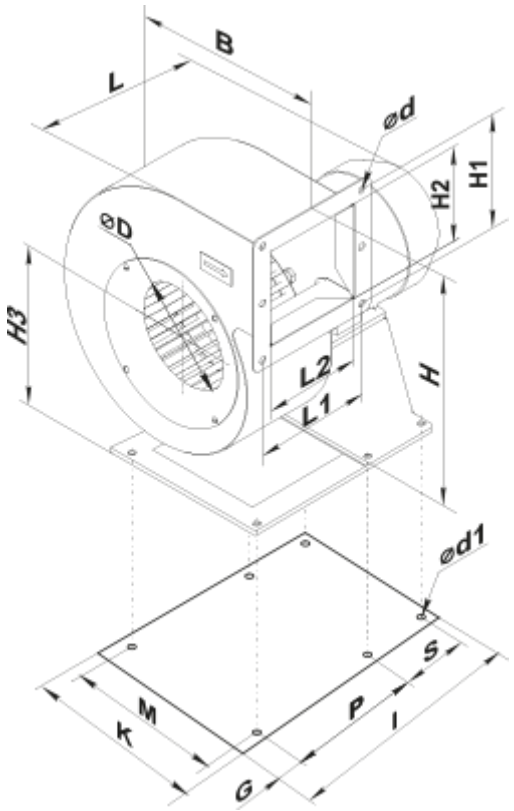

Accessories

Speed controllers

Name	Photo	Description
RSA5D-12,0-M		Three phase speed controller