VCUN 240x114-3,0-2 R90

Radial fans

• Sound pressure level LpA at 3 m: 78
• Impeller type: Centrifugal impeller with forward curved blades
• Casing material: Coated steel

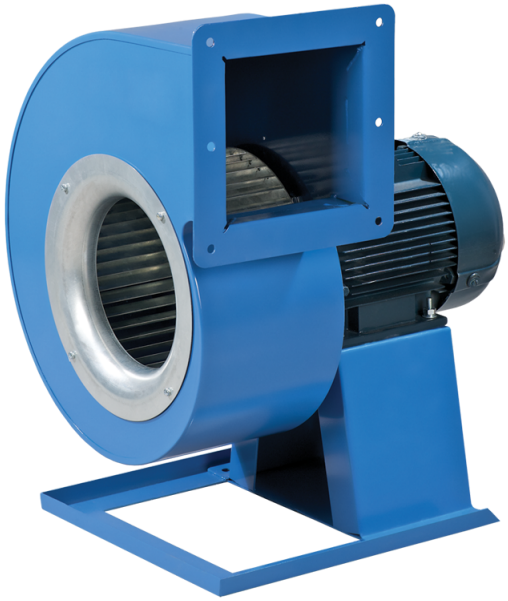

	Unit of measurement	VCUN 240x114-3,0-2 R90
Phases	-	3
Maximum supply voltage	V	400
Minimum supply voltage	V	400
Power supply frequency	Hz	50
Rated power	W	3000
Unit current	A	6.1
Maximum airflow	m^3/h	4350
Rotation speed at 50hz	-	2870
Sound pressure level LpA at 3 m	dB(A)	78
Weight	kg	31.4
Transported air temperature (max)	°C	60
Ingress protection rating	-	IP54
Ingress protection rating of the drive	-	IP54
Impeller material	-	Galvanized steel

Dimensions

ØD	Ød	Ød1	B	H	H1	H2	H3	L	L1	L2	P	M	I	G	K	S
240	10	12	414	568	186	161	282	461	186	156	195	275	362	27	330	125

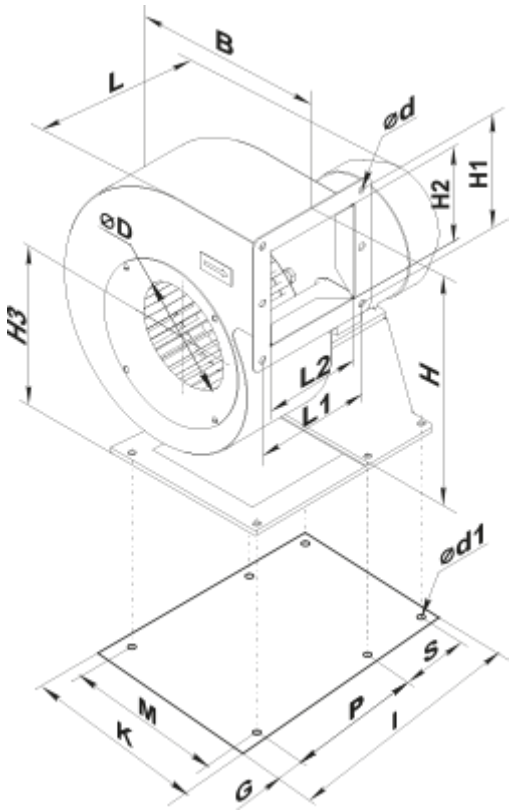

Accessories

Speed controllers

Name	Photo	Description
RSA5D-8,0-M		Three phase speed controller
RSA5D-11,0-M		Three phase speed controller
RSA5D-12,0-M		Three phase speed controller