VCU 4E 250x140

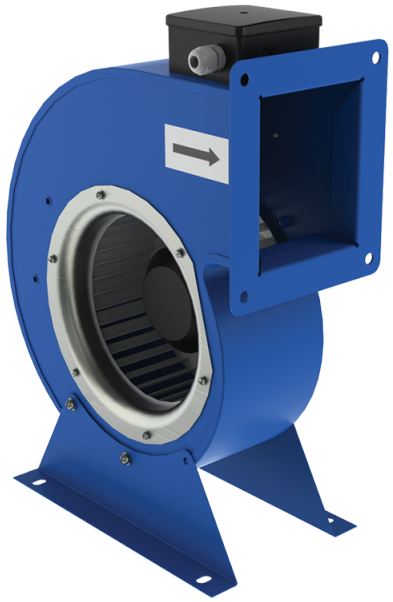

Radial fans

• Sound pressure level LpA at 3 m: 60
• Impeller type: Centrifugal impeller with forward curved blades
• Casing material: Coated steel

	Unit of measurement	VCU 4E 250x140
Phases	-	1
Maximum supply voltage	V	230
Minimum supply voltage	V	230
Power supply frequency	Hz	50
Rated power	W	570
Unit current	A	2.48
Maximum airflow	m^3/h	2000
Rotation speed at 50hz	-	1310
Sound pressure level LpA at 3 m	dB(A)	60
Weight	kg	16.3
Transported air temperature (max)	°C	70
Transported air temperature (min)	°C	-40
Ingress protection rating	-	IPX4
Ingress protection rating of the drive	-	IP44
Impeller material	-	Galvanized steel

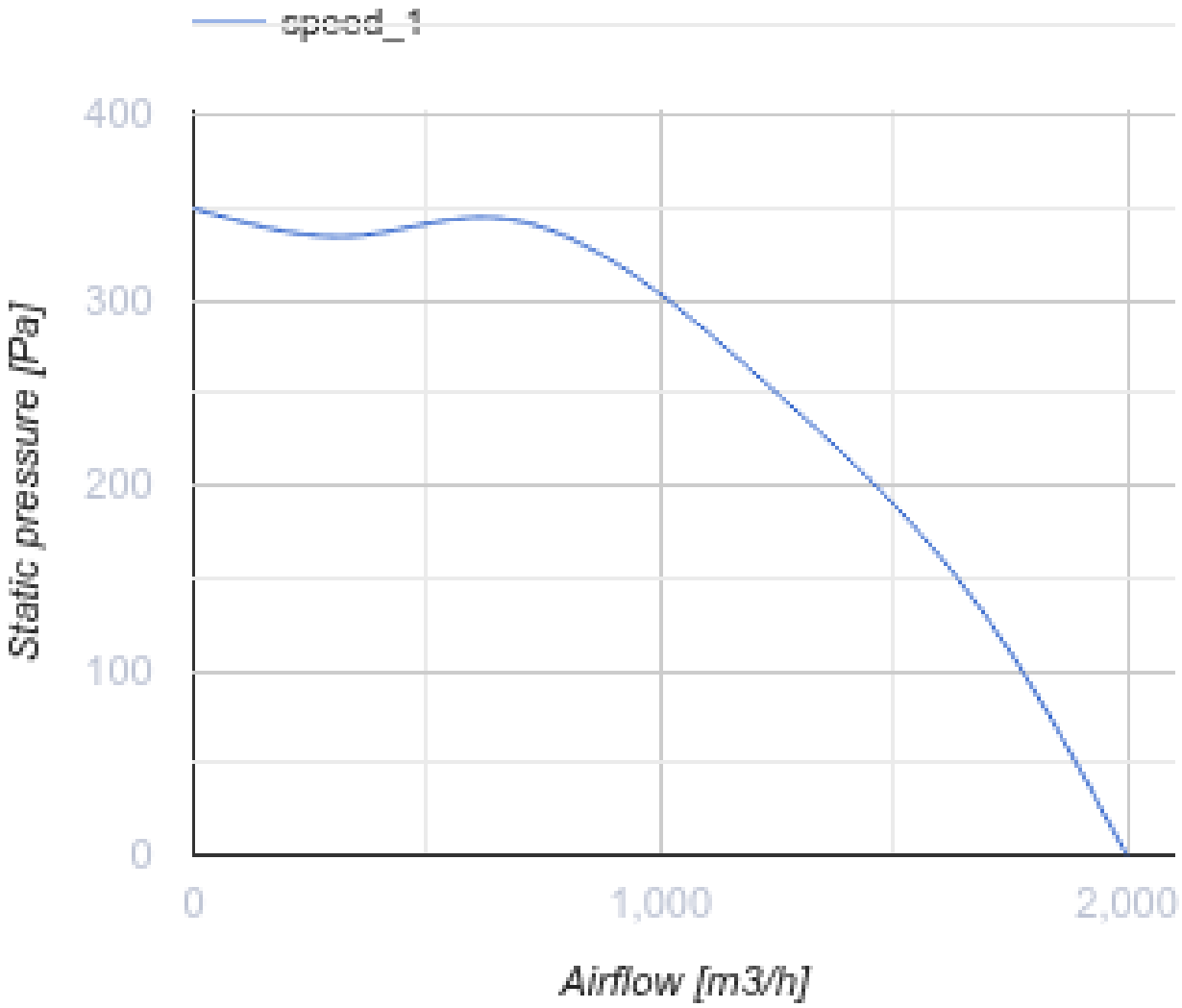
speed_1
400
300
200
100
0
Static pressure [Pa]
0
1,000
2,000
Airflow [m3/h]

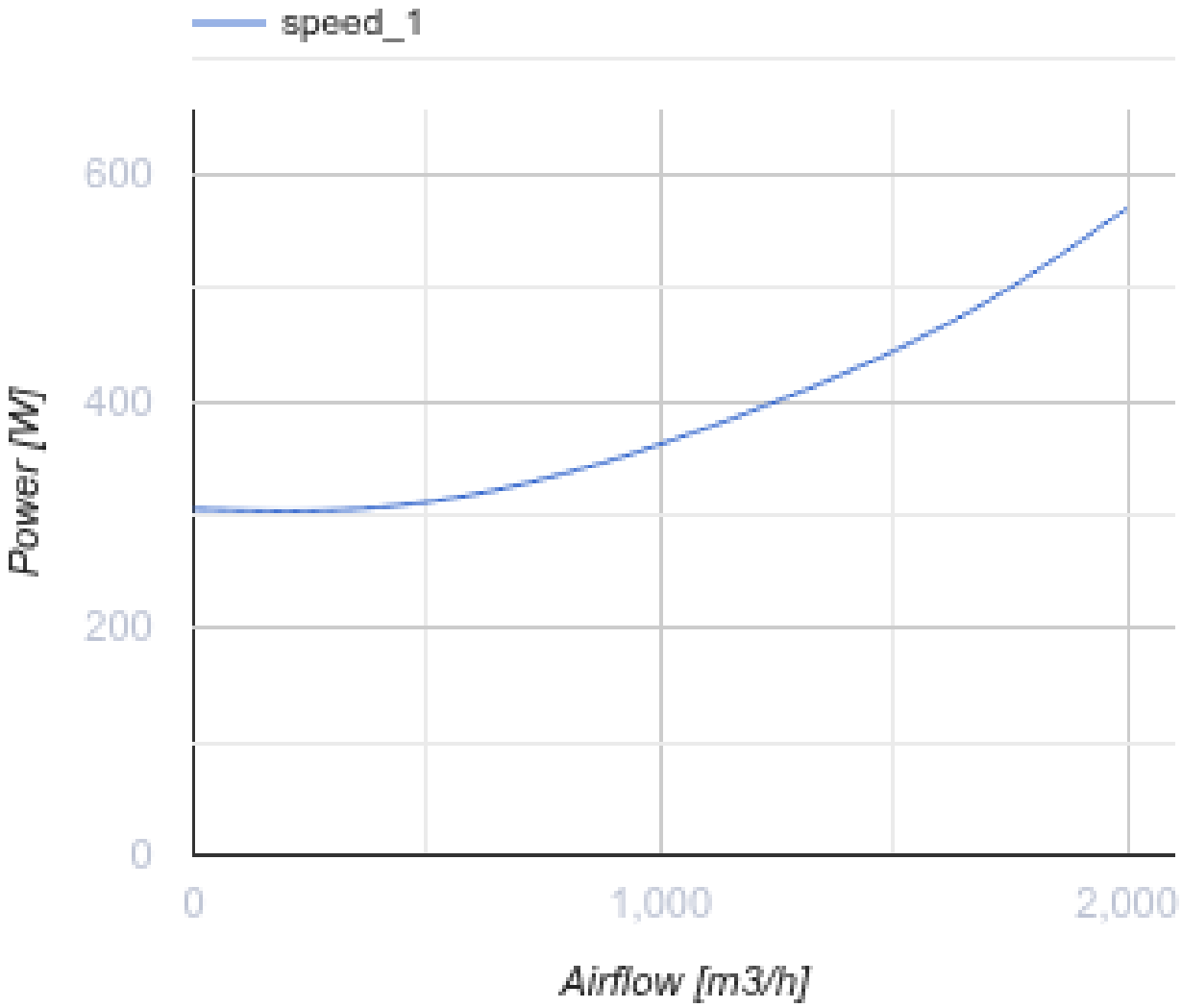

Dimensions

ØD	B	H	H1	H2	L	L1	L2	P	M	d
250	410	485	230	191	205	230	197	238	270	11

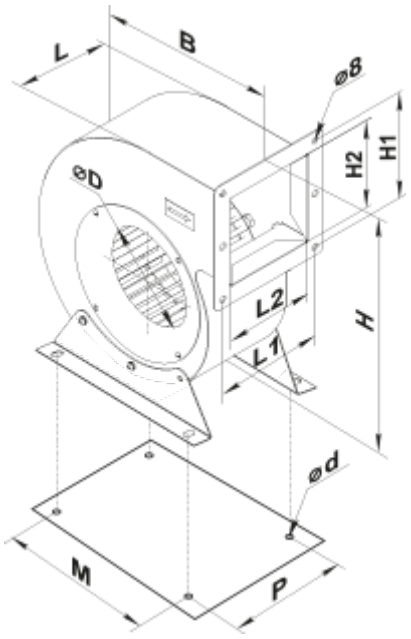

Accessories

Speed controllers

Name	Photo	Description
RSA5E-3,5-T		Speed controllers are applied for air flow control of single phase fans by means of motor step speed control
RSA5E-5,0-T		Speed controllers are applied for air flow control of single phase fans by means of motor step speed control
RSA5E-7,5-T		Speed controllers are applied for air flow control of single phase fans by means of motor step speed control

Ecodesign

Trademark	Vents
Model	VCU 4E 250x140
Type of drive installed	External MSD or VSD
Type of heat recovery system	None
Nominal external pressure (Pa)	286
Maximum external leakage rates (%)	2.7
Static efficiency (%)	22.7
Effective electric power input (kW)	0.389
Sound power level (dB(A))	80
Declared typology	NRVU UVU