# VCU 4E 180x92

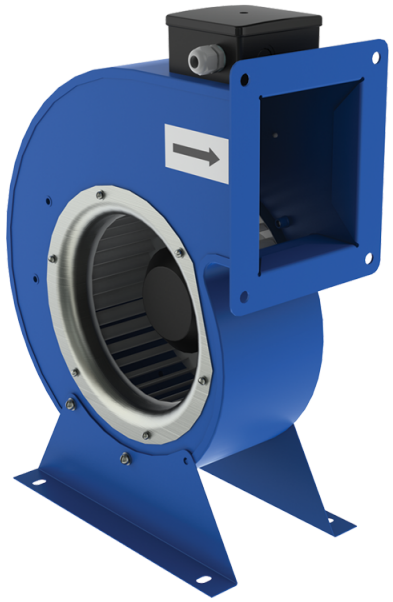

Radial fans

• Sound pressure level LpA at 3 m: 62
• Impeller type: Centrifugal impeller with forward curved blades
• Casing material: Coated steel

| | Unit of measurement | VCU 4E 180x92 |
|---|---|---|
| Phases | - | 1 |
| Minimum supply voltage | V | 230 |
| Maximum supply voltage | V | 230 |
| Power supply frequency | Hz | 50 |
| Rated power | W | 160 |
| Unit current | A | 0.7 |
| Maximum airflow | m³/h | 800 |
| Rotation speed at 50hz | - | 1465 |
| Sound pressure level LpA at 3 m | dB(A) | 62 |
| Weight | kg | 7.1 |
| Transported air temperature (max) | °C | 45 |
| Transported air temperature (min) | °C | -25 |
| Ingress protection rating | - | IPX4 |
| Ingress protection rating of the drive | - | IP44 |
| Impeller material | - | Galvanized steel |

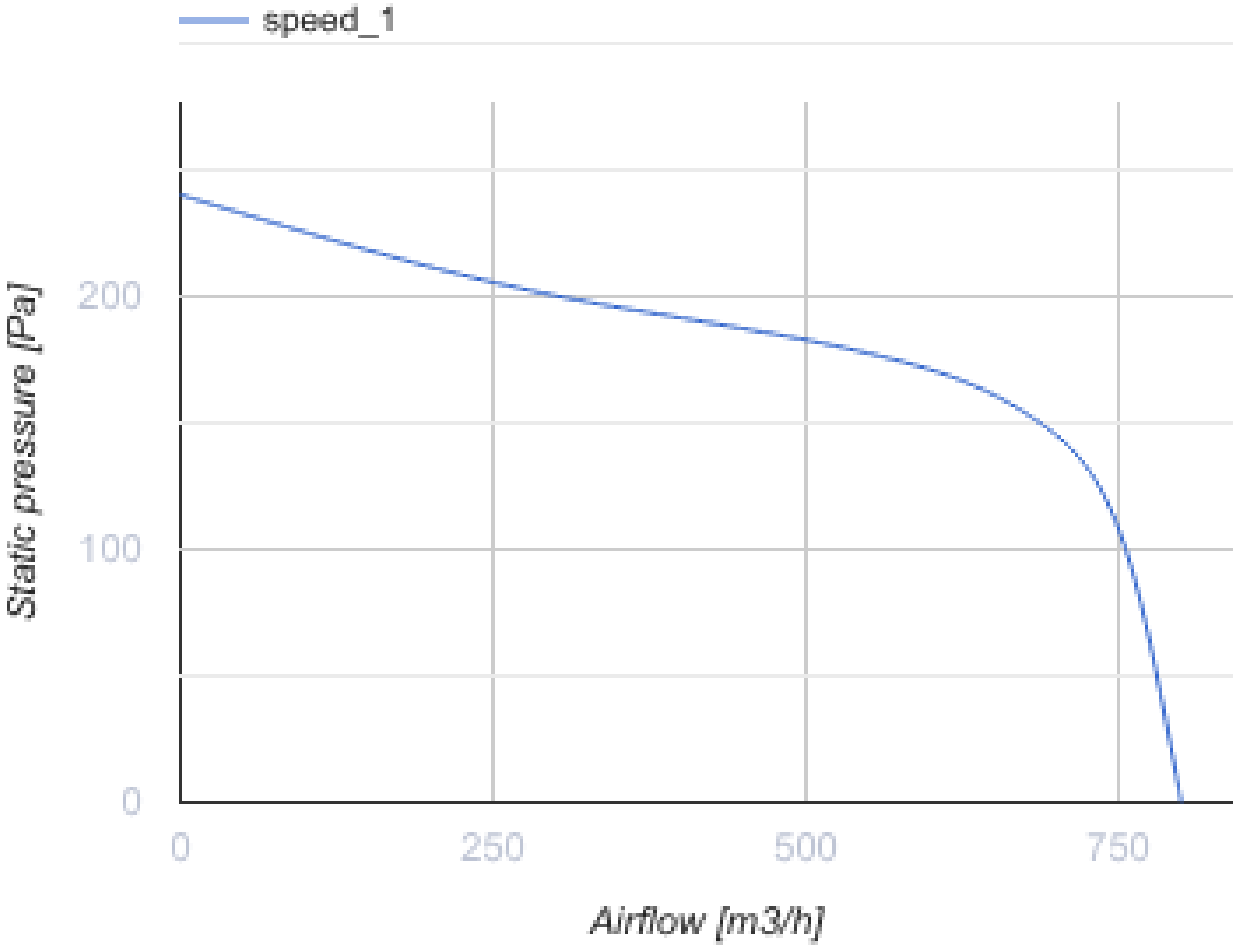
speed_1
Static pressure [Pa]
200
100
0
0
250
500
750
Airflow [m3/h]

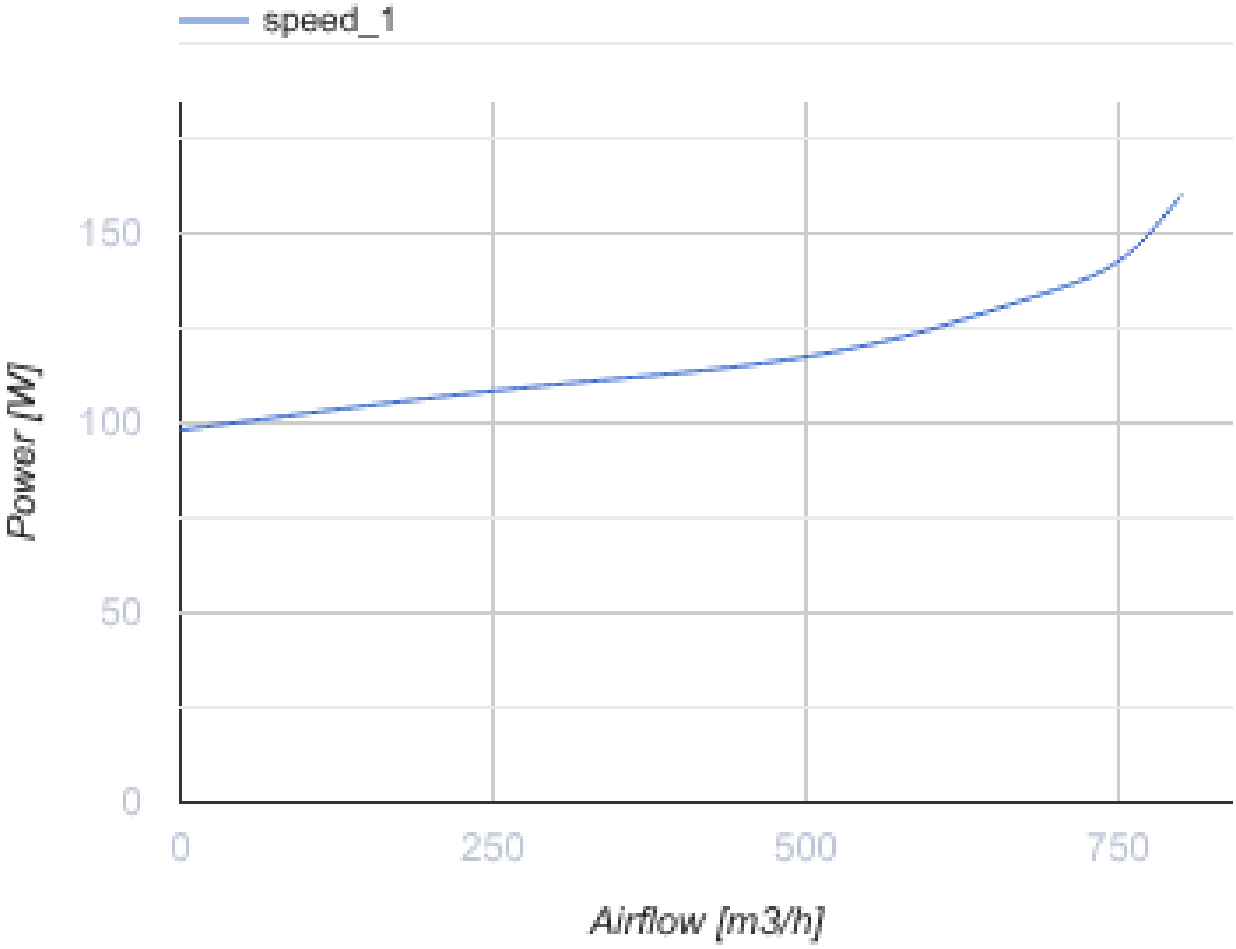


## Dimensions

| ØD | B | H | H1 | H2 | L | L1 | L2 | P | M | d |
|---|---|---|---|---|---|---|---|---|---|---|
| 180 | 311 | 360 | 150 | 120 | 148 | 170 | 140.4 | 181 | 230 | 9 |

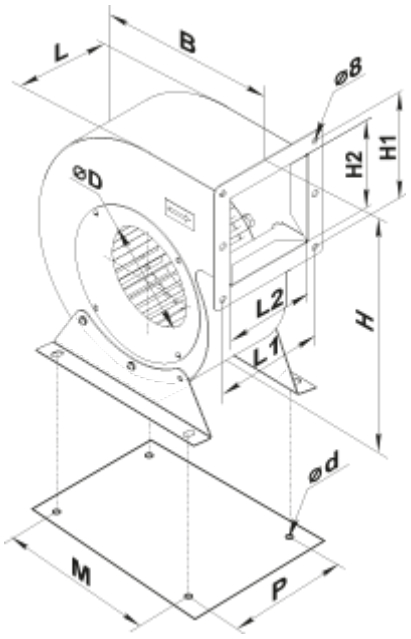


## Accessories

### Speed controllers

| Name | Photo | Description |
|---|---|---|
| RSA5E-3,5-T |  | Speed controllers are applied for air flow control of single phase fans by means of motor step speed control |
| RSA5E-5,0-T |  | Speed controllers are applied for air flow control of single phase fans by means of motor step speed control |
| RSA5E-7,5-T |  | Speed controllers are applied for air flow control of single phase fans by means of motor step speed control |

## Ecodesign

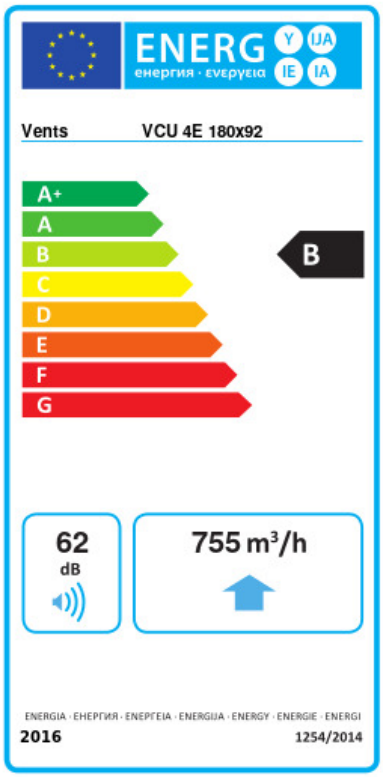


| Trademark | Vents | | | | | |
|---|---|---|---|---|---|---|
| Model | VCU 4E 180x92 | | | | | |
| Specific energy consumption (SEC) (kWh/(m²/a)) | Cold | | Average | | Warm | |
| | -53.2 | A+ | -26.1 | B | -10.6 | E |
| Type of ventilation unit | Unidirectional | | | | | |
| Type of drive installed | Variable speed | | | | | |
| Type of heat recovery system | None | | | | | |
| Maximum flow rate (m³/h) | 755 | | | | | |
| Electric power input (W) | 160 | | | | | |
| Reference flow rate (m³/s) | 0.147 | | | | | |
| Reference pressure difference (Pa) | 50 | | | | | |
| Specific power input (SPI) (W/(m³/h)) | 0.167 | | | | | |
| Control typology | Local demand control | | | | | |
| Maximum external leakage rates (%) | 2.7 | | | | | |
| Declared typology | RVU UVU | | | | | |
| Sound power level (dB(A)) | 62 | | | | | |
| The annual electricity consumption (AEC) (kWh/a) | Cold | | Average | | Warm | |
| | 88 | | 88 | | 88 | |
| The annual heating saved (AHS) (kWh/a) | Cold | | Average | | Warm | |
| | 5536 | | 2830 | | 1280 | |