VCN 200 K

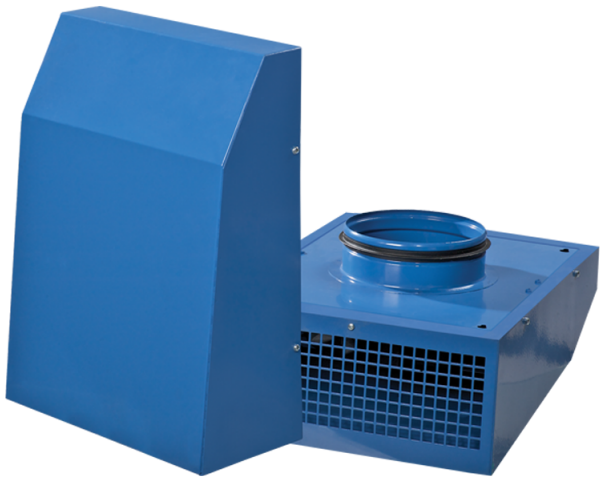

Extract centrifugal fans for outdoor wall installation

• Sound pressure level LpA at 3 m: 62
• Impeller type: Centrifugal impeller with backward curved blades
• Casing material: Coated steel
• Installation in any position

	Unit of measurement	VCN 200 K
Connected air duct size	mm	200
Phases	-	1
Maximum supply voltage	V	230
Minimum supply voltage	V	230
Power supply frequency	Hz	50/60
Rated power	W	96
Unit current	A	0.42
Maximum airflow	m^3/h	700
Rotation speed at 50hz	-	2515
Sound pressure level LpA at 3 m	dB(A)	62
Weight	kg	4.62
Transported air temperature (max)	°C	55
Ingress protection rating	-	IPX4
Ingress protection rating of the drive	-	IP44
Impeller material	-	Plastic

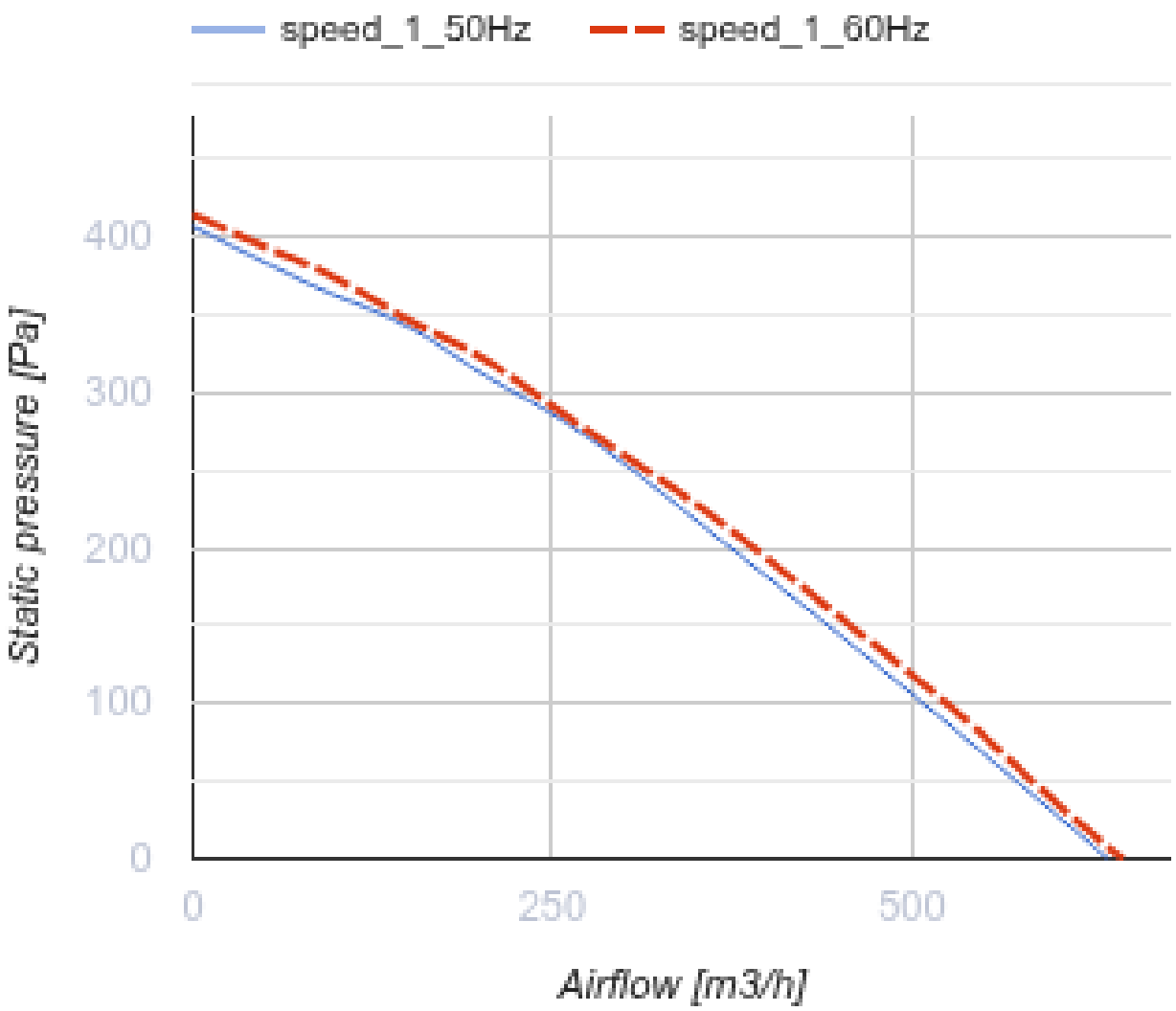
speed_1_50Hz
speed_1_60Hz
Static pressure [Pa]
400
300
200
100
0
0
250
500
Airflow [m3/h]

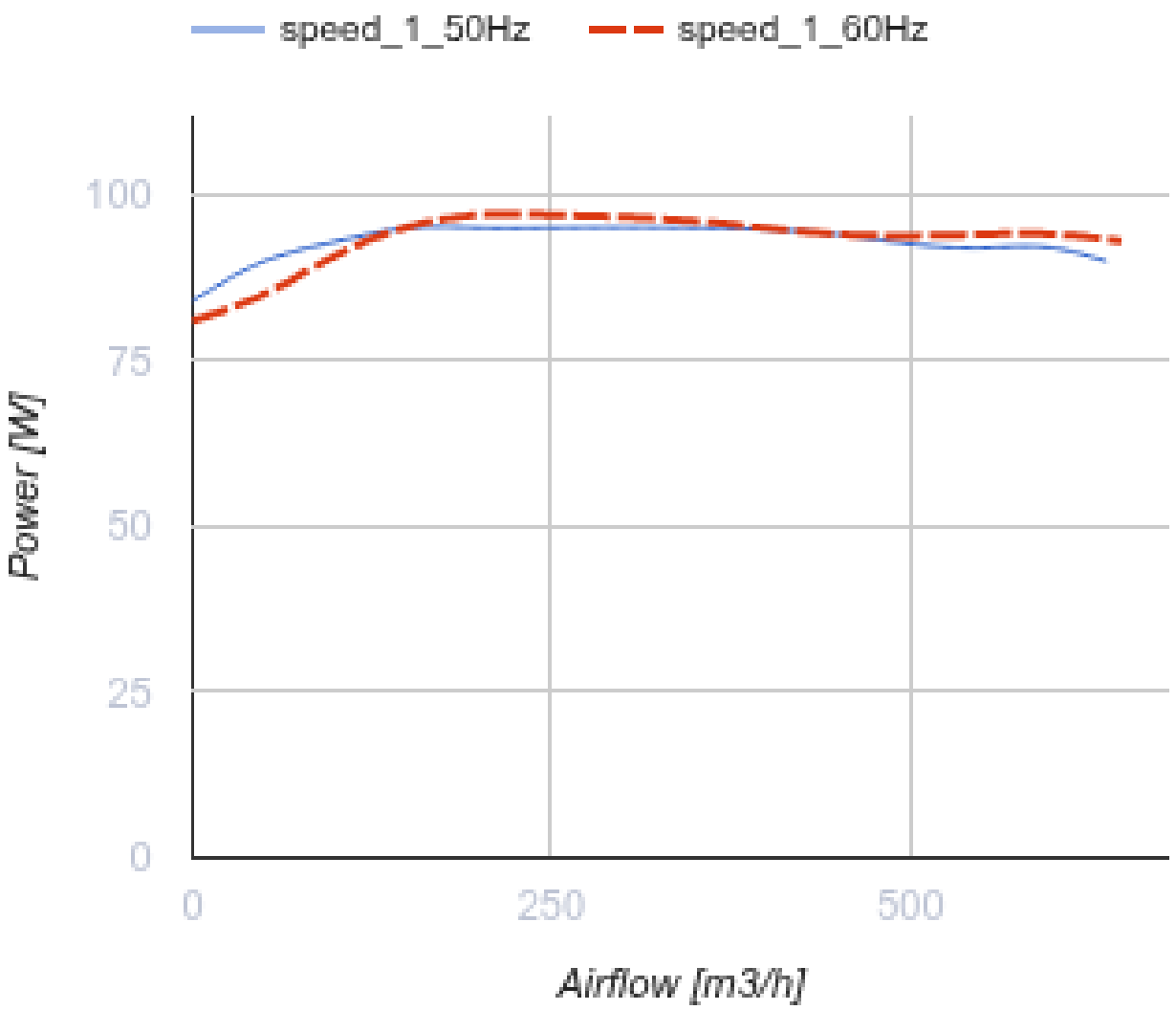

Dimensions

ØD	B	H	L
199	300	400	138.2

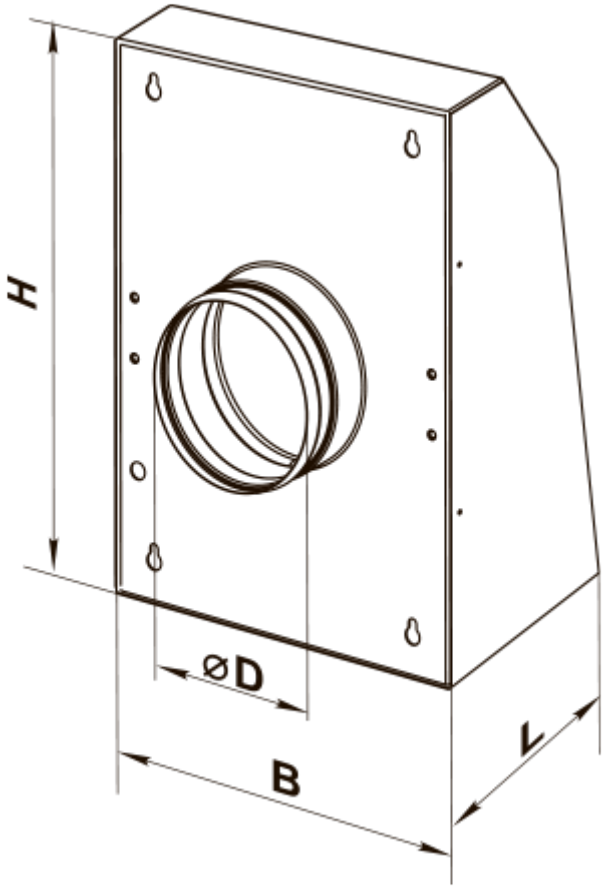
H
ØD
B
L