VCN 150

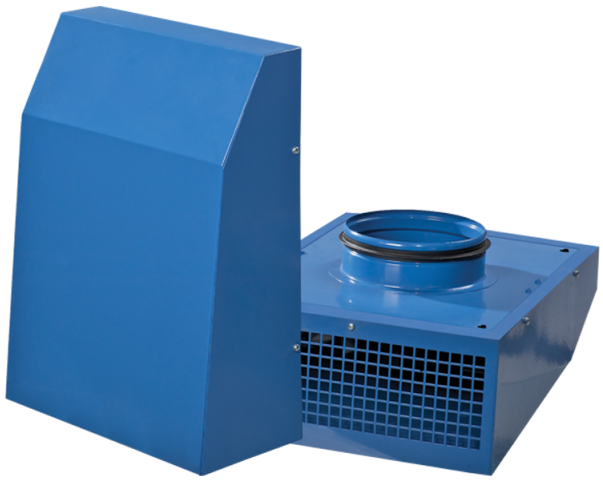

Extract centrifugal fans for outdoor wall installation

• Sound pressure level LpA at 3 m: 58
• Impeller type: Centrifugal impeller with backward curved blades
• Casing material: Coated steel
• Installation in any position

	Unit of measurement	VCN 150
Connected air duct size	mm	150
Phases	-	1
Minimum supply voltage	V	230
Maximum supply voltage	V	230
Power supply frequency	Hz	50/60
Rated power	W	96
Unit current	A	0.42
Maximum airflow	m^3/h	630
Rotation speed at 50hz	-	2400
Sound pressure level LpA at 3 m	dB(A)	58
Weight	kg	4.53
Transported air temperature (max)	°C	55
Ingress protection rating	-	IPX4
Ingress protection rating of the drive	-	IP44
Impeller material	-	Plastic

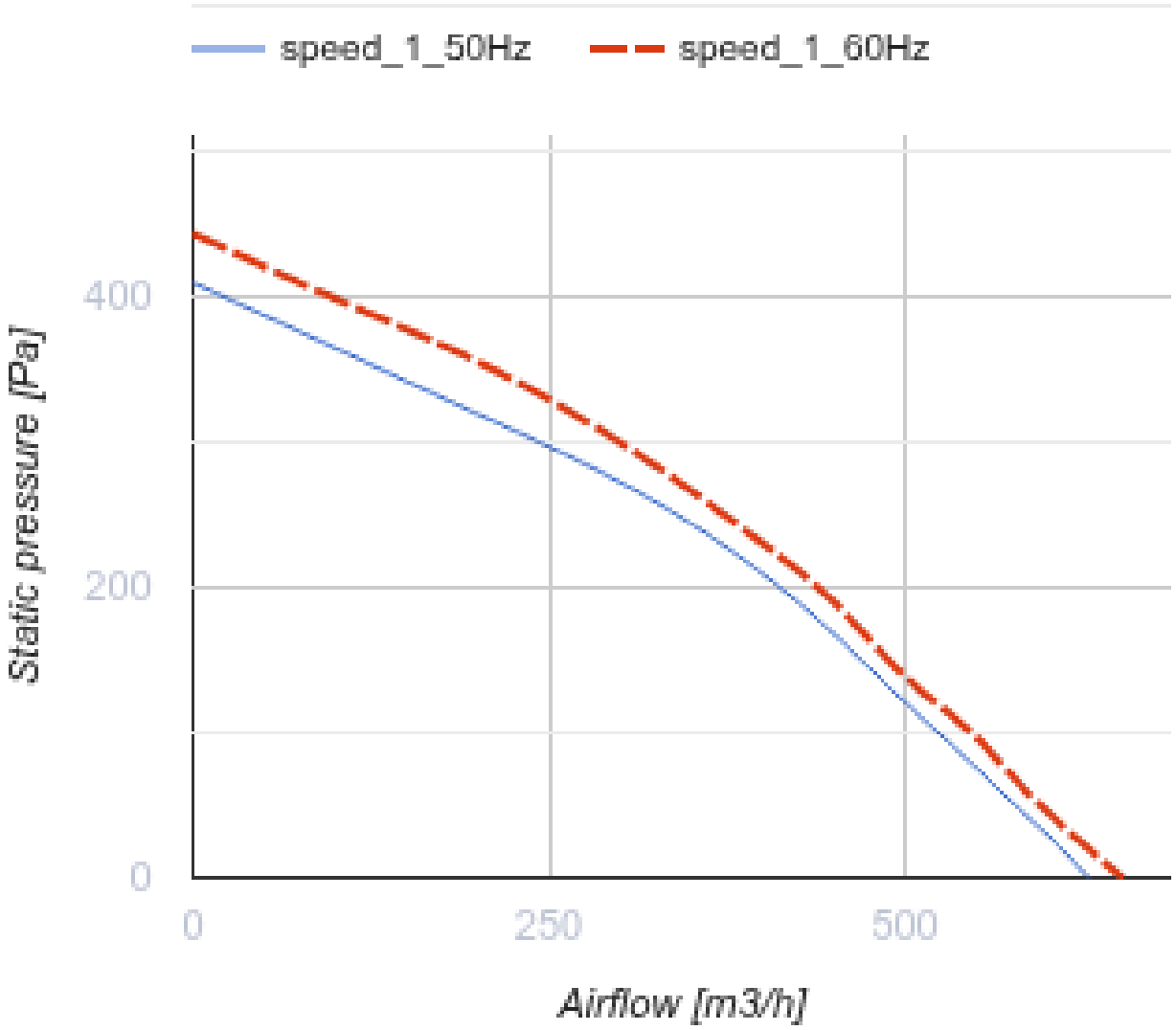
speed_1_50Hz
speed_1_60Hz
400
200
0
Static pressure [Pa]
0
250
500
Airflow [m3/h]

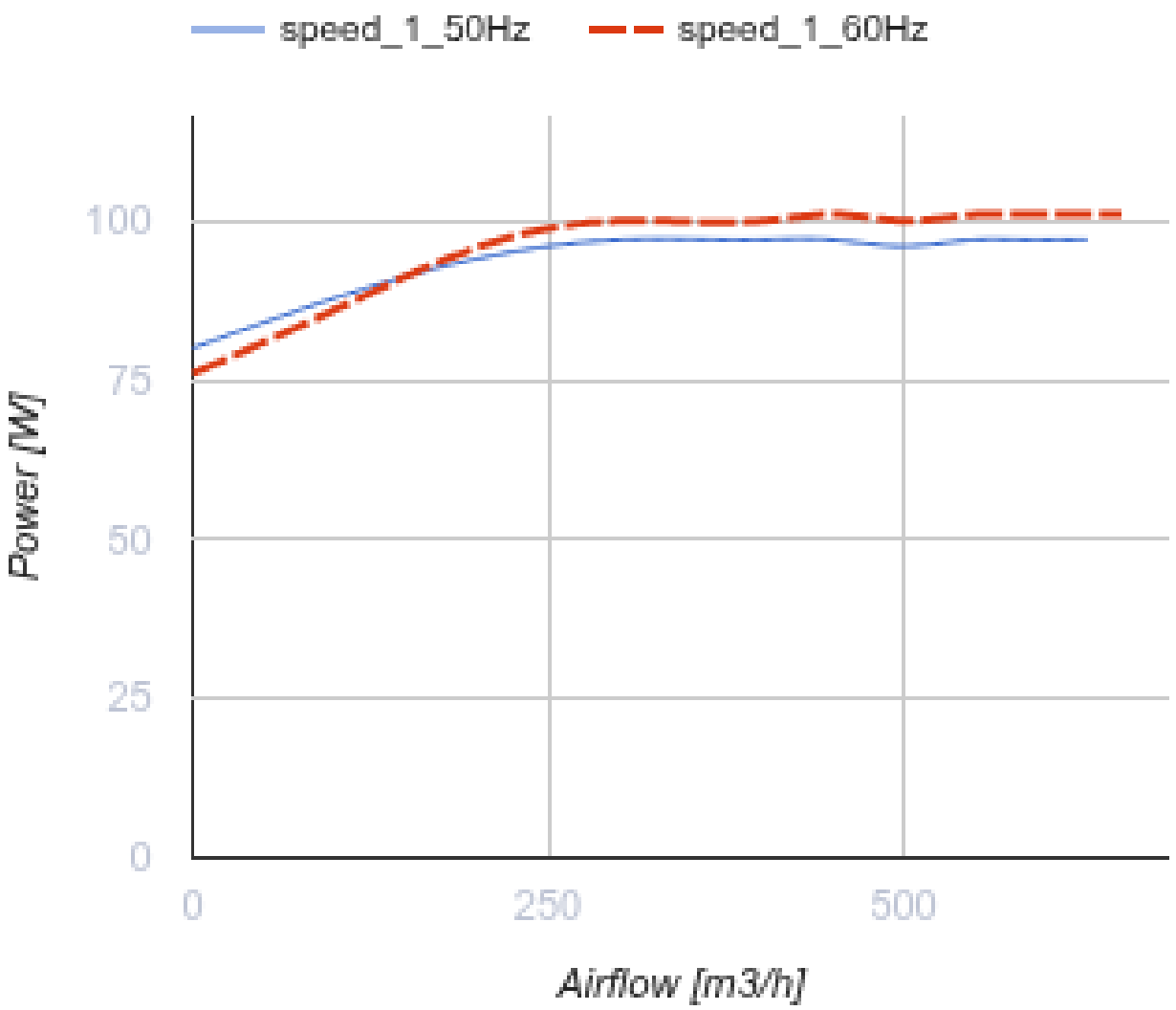

Dimensions

ØD	B	H	L
149	300	400	138.2

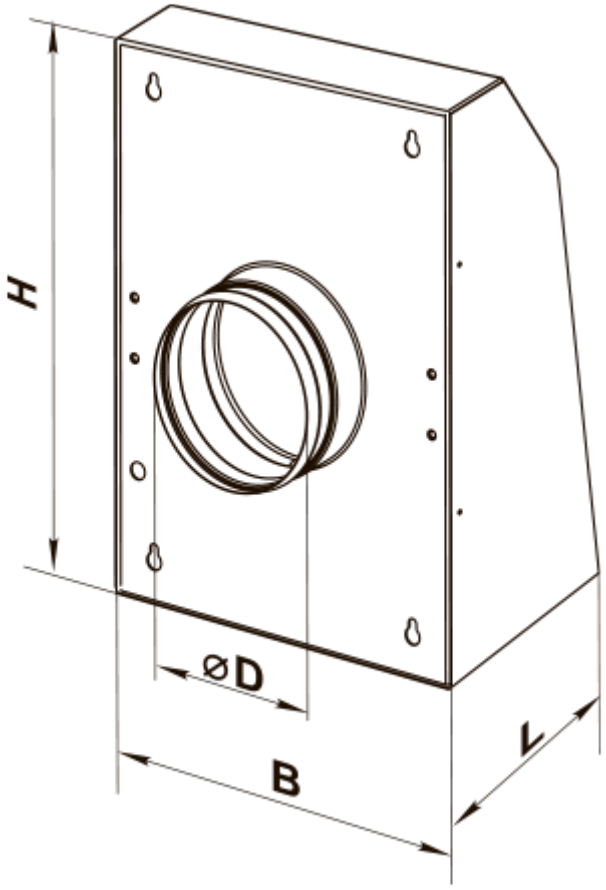
H
ØD
B
L

Ecodesign

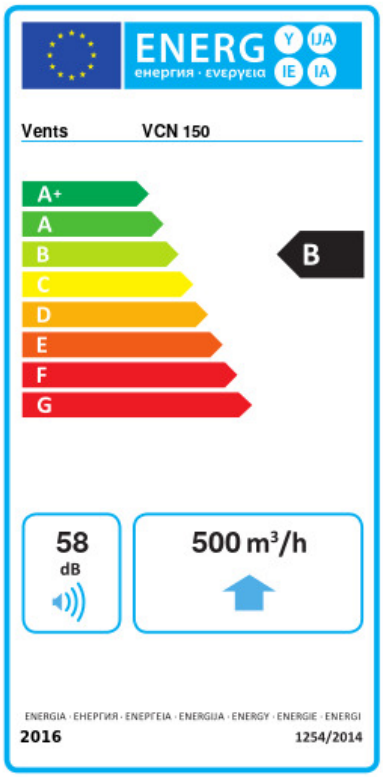

Trademark	Vents					
Model	VCN 150					
Specific energy consumption (SEC) (kWh/(m²/a))	Cold		Average		Warm	
	-53.3	A+	-26.2	B	-10.7	E
Type of ventilation unit	Unidirectional					
Type of drive installed	Variable speed					
Type of heat recovery system	None					
Maximum flow rate (m³/h)	500					
Electric power input (W)	100					
Reference flow rate (m³/s)	0.097					
Reference pressure difference (Pa)	50					
Specific power input (SPI) (W/(m³/h))	0.157					
Control typology	Local demand control					
Maximum external leakage rates (%)	2.7					
Declared typology	RVU UVU					
Sound power level (dB(A))	58					
The annual electricity consumption (AEC) (kWh/a)	Cold		Average		Warm	
	83		83		83	
The annual heating saved (AHS) (kWh/a)	Cold		Average		Warm	
	5536		2830		1280	