VCN 100 K

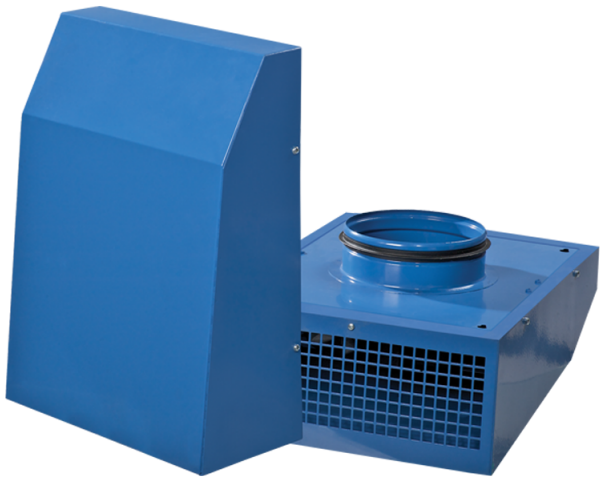

Extract centrifugal fans for outdoor wall installation

• Sound pressure level LpA at 3 m: 54
• Impeller type: Centrifugal impeller with backward curved blades
• Casing material: Coated steel
• Installation in any position

	Unit of measurement	VCN 100 K
Connected air duct size	mm	100
Phases	-	1
Minimum supply voltage	V	230
Maximum supply voltage	V	230
Power supply frequency	Hz	50/60
Rated power	W	71
Unit current	A	0.31
Maximum airflow	m^3/h	295
Rotation speed at 50hz	-	2530
Sound pressure level LpA at 3 m	dB(A)	54
Weight	kg	3.82
Transported air temperature (max)	°C	55
Ingress protection rating	-	IPX4
Ingress protection rating of the drive	-	IP44
Impeller material	-	Plastic

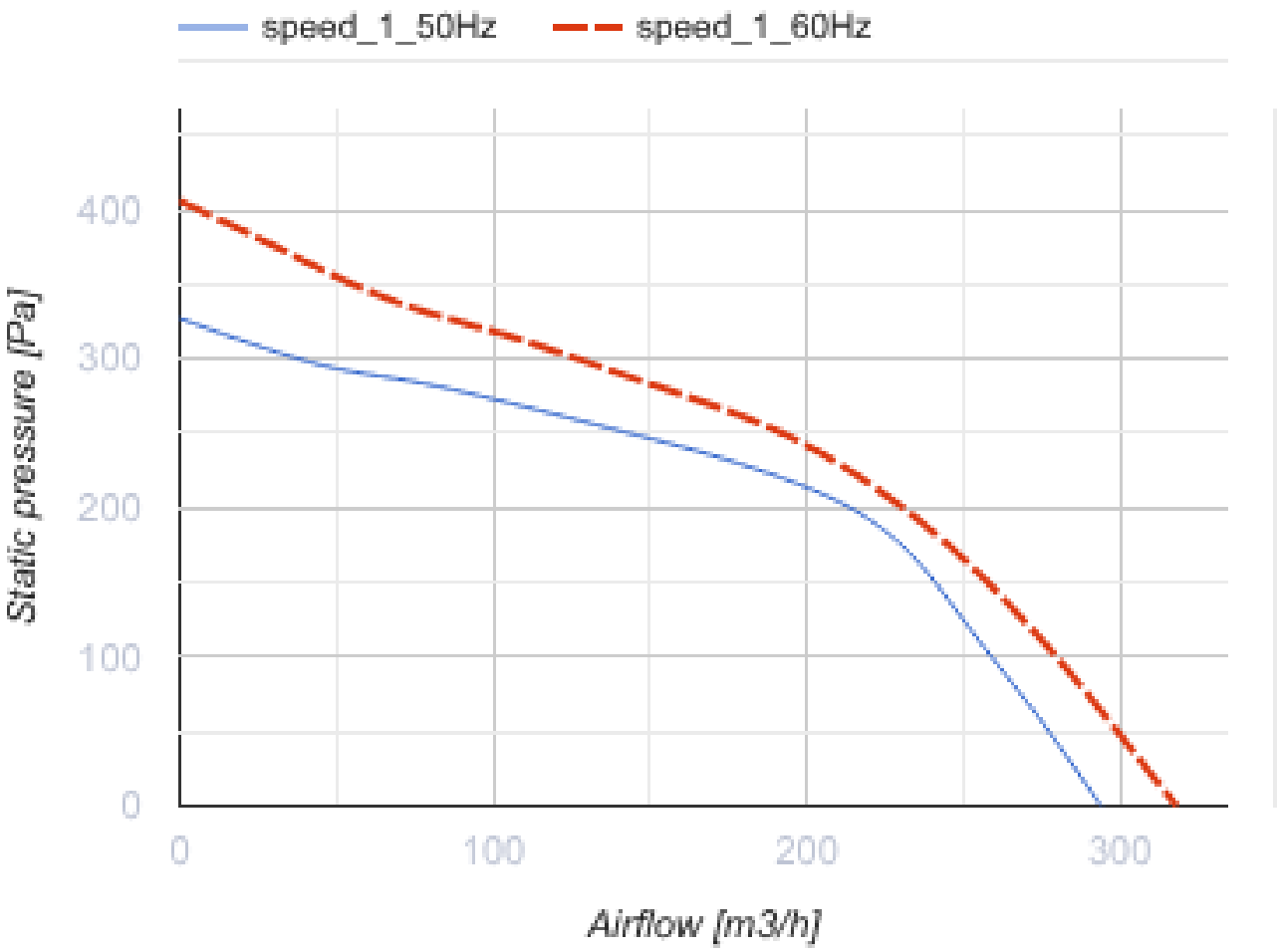
speed_1_50Hz
speed_1_60Hz
Static pressure [Pa]
400
300
200
100
0
0
100
200
300
Airflow [m3/h]

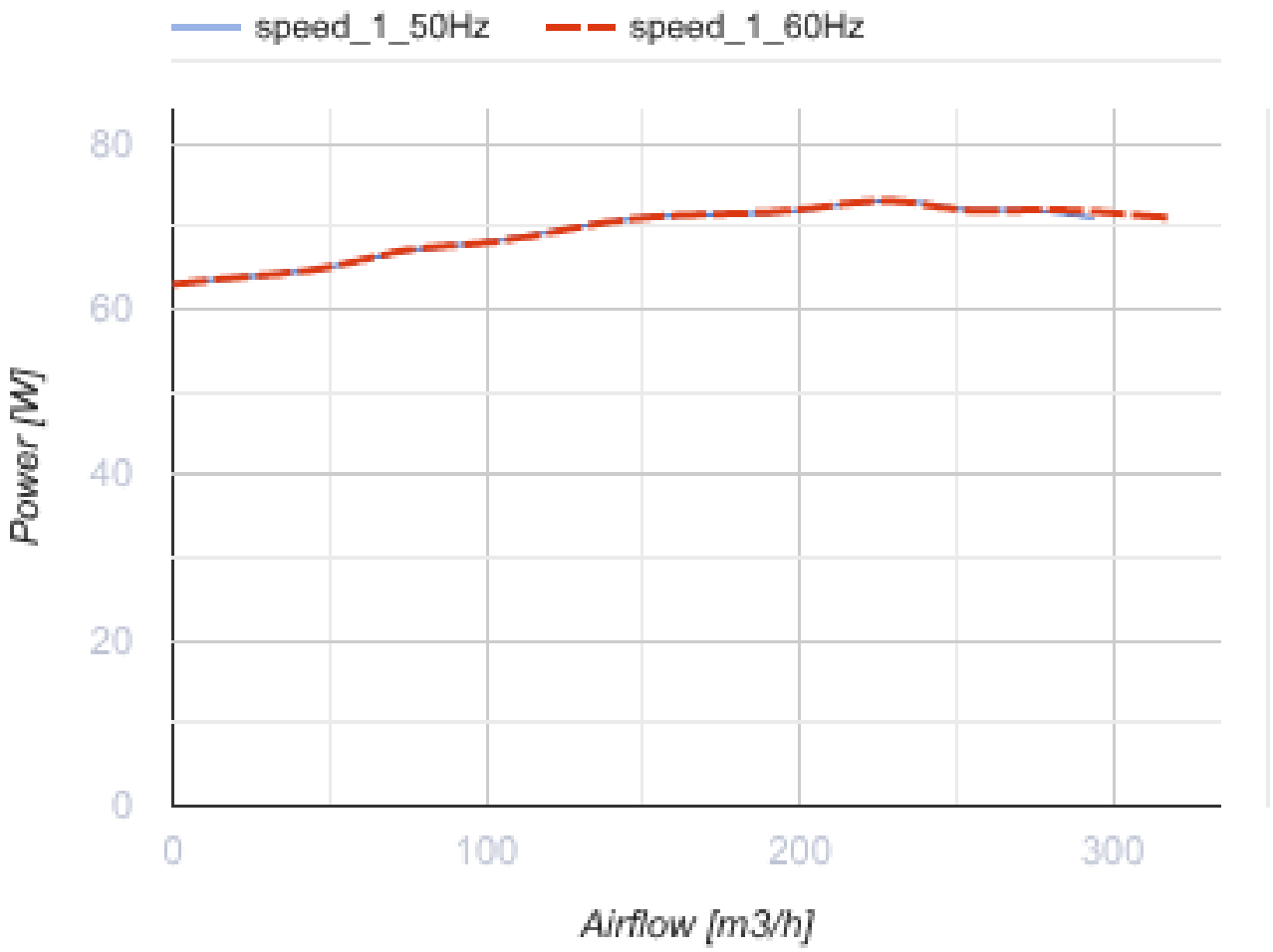

Dimensions

ØD	B	H	L
99	260	355	138

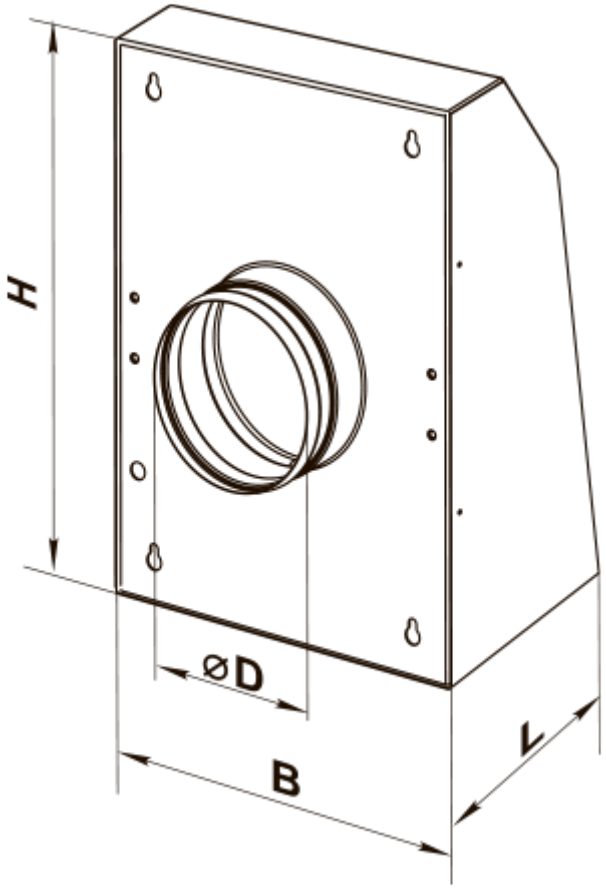
H
ØD
B
L