VCN 100 EC

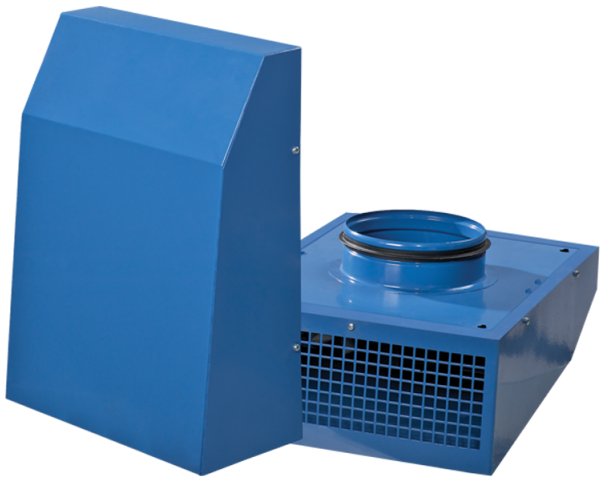

Extract centrifugal fans for outdoor wall installation with EC-motors

• Sound pressure level LpA at 3 m: 55
• Impeller type: Centrifugal impeller with backward curved blades
• Casing material: Coated steel
• Installation in any position

	Unit of measurement	VCN 100 EC
Connected air duct size	mm	100
Phases	-	1
Minimum supply voltage	V	230
Maximum supply voltage	V	230
Power supply frequency	Hz	50/60
Rated power	W	89
Unit current	A	0.53
Maximum airflow	m³/h	313
Rotation speed at 50hz	-	3460
Sound pressure level LpA at 3 m	dB(A)	55
Weight	kg	3.6
Transported air temperature (max)	°C	40
Transported air temperature (min)	°C	-25
Ingress protection rating	-	IPX4
Ingress protection rating of the drive	-	IP55
Impeller material	-	Plastic

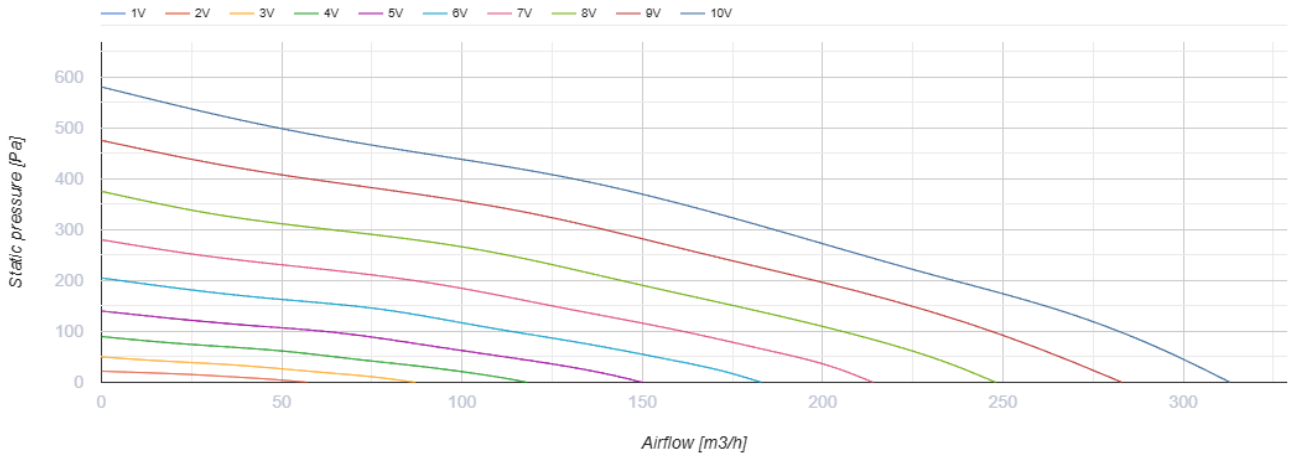

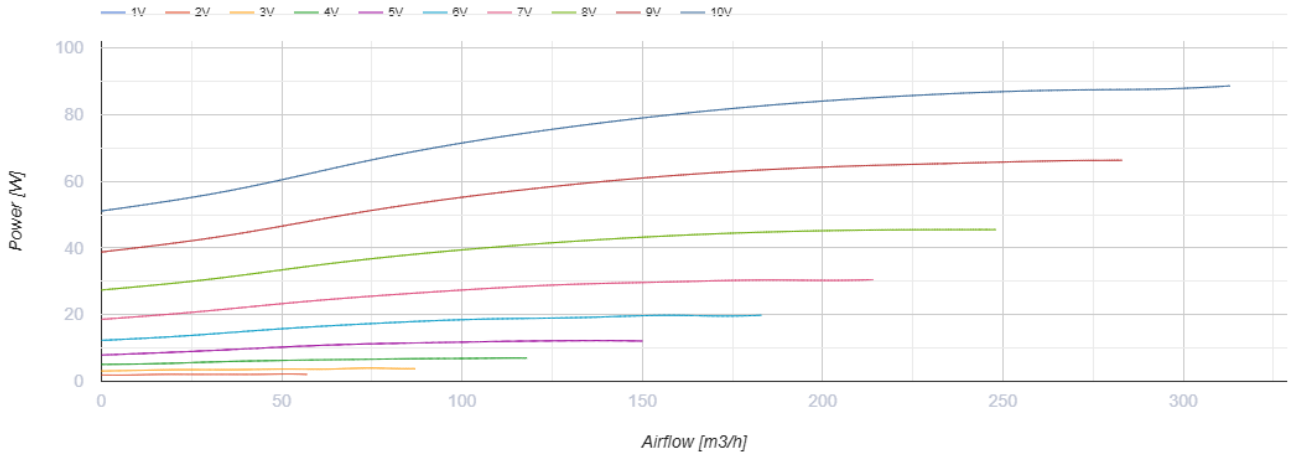

Dimensions

ØD	L	B	H
100	355	260	140

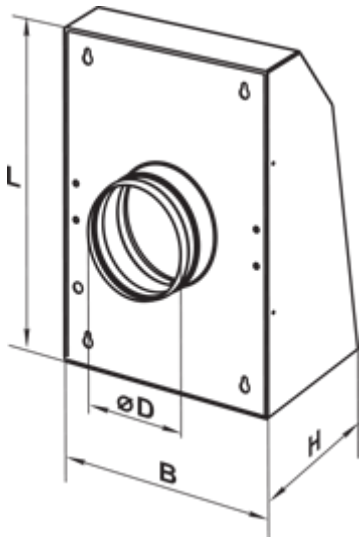

Accessories

Speed controllers

Name	Photo	Description
R-1/010		Speed controller for EC motors

Ecodesign

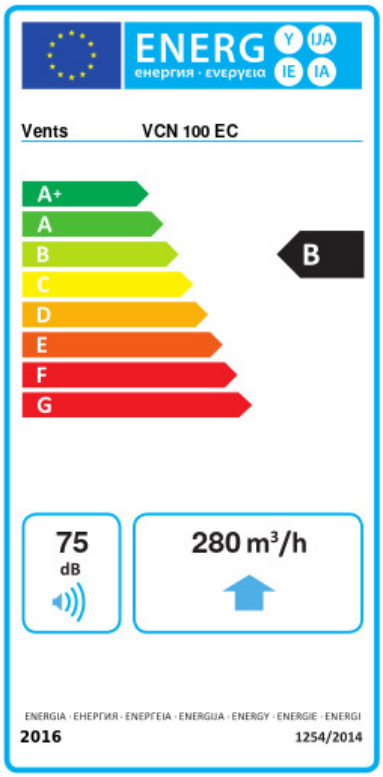

Trademark	Vents					
Model	VCN 100 EC					
Specific energy consumption (SEC) (kWh/(m²/a))	Cold		Average		Warm	
	-53.3	A+	-26.3	B	-10.8	E
Type of ventilation unit	Unidirectional					
Type of drive installed	Variable speed					
Type of heat recovery system	None					
Maximum flow rate (m³/h)	280					
Electric power input (W)	87.6					
Reference flow rate (m³/s)	0.054					
Reference pressure difference (Pa)	50					
Specific power input (SPI) (W/(m³/h))	0.155					
Control typology	Local demand control					
Maximum external leakage rates (%)	2.7					
Sound power level (dB(A))	75					
Declared typology	RVU UVU					
The annual electricity consumption (AEC) (kWh/a)	Cold		Average		Warm	
	82		82		82	
The annual heating saved (AHS) (kWh/a)	Cold		Average		Warm	
	5536		2830		1280	