Uni R A14

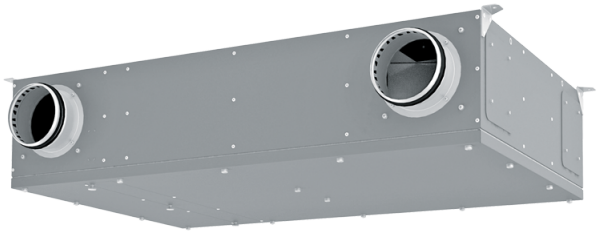

Hybrid decentralized universal installation type unit for single-room apartments with an air flow of up to 160 m³/h

- Sound pressure level LpA at 3 m: 33
- Sound pressure level LpA at 1 m: 42
- Heat exchanger type: Plate counterflow
- Heat exchanger material: Profiled polystyrene plates
- Supply filter: ePM1 70% / F7 (G4 option)
- Extract filter: Coarse 90% / G4
- Sound-insulated casing
- Bypass: Auto
- BMS protocol: ModBus
- Control: Smartphone
- Casing material: Galvanized steel
- Humidity sensor: Optional
- CO2 sensor: Optional
- PM2.5 sensor: Optional
- Temperature sensor: Built-in

	Unit of measurement	Uni R A14		
Connected air duct size	mm	125		
Phases	-	1		
Minimum supply voltage	V	230		
Maximum supply voltage	V	230		
Power supply frequency	Hz	50/60		
Rated power	W	58		
Unit current	A	0.5		
Maximum airflow	m³/h	60	90	160
Rotation speed at 50hz	-	2800		
Sound pressure level LpA at 3 m	dB(A)	33		
Sound pressure level LpA at 1 m	dB(A)	42		
Heat recovery efficiency, max	%	95		
Heat exchanger type	-	Plate counterflow		
Heat exchanger material	-	Profiled polystyrene plates		
Weight	kg	31		
Supply filter	-	ePM1 70% / F7 (G4 option)		
Extract filter	-	Coarse 90% / G4		
Transported air temperature (max)	°C	40		
Transported air temperature (min)	°C	-25		
Minimum wall thickness	mm	70		

Maximum wall thickness	mm	2000

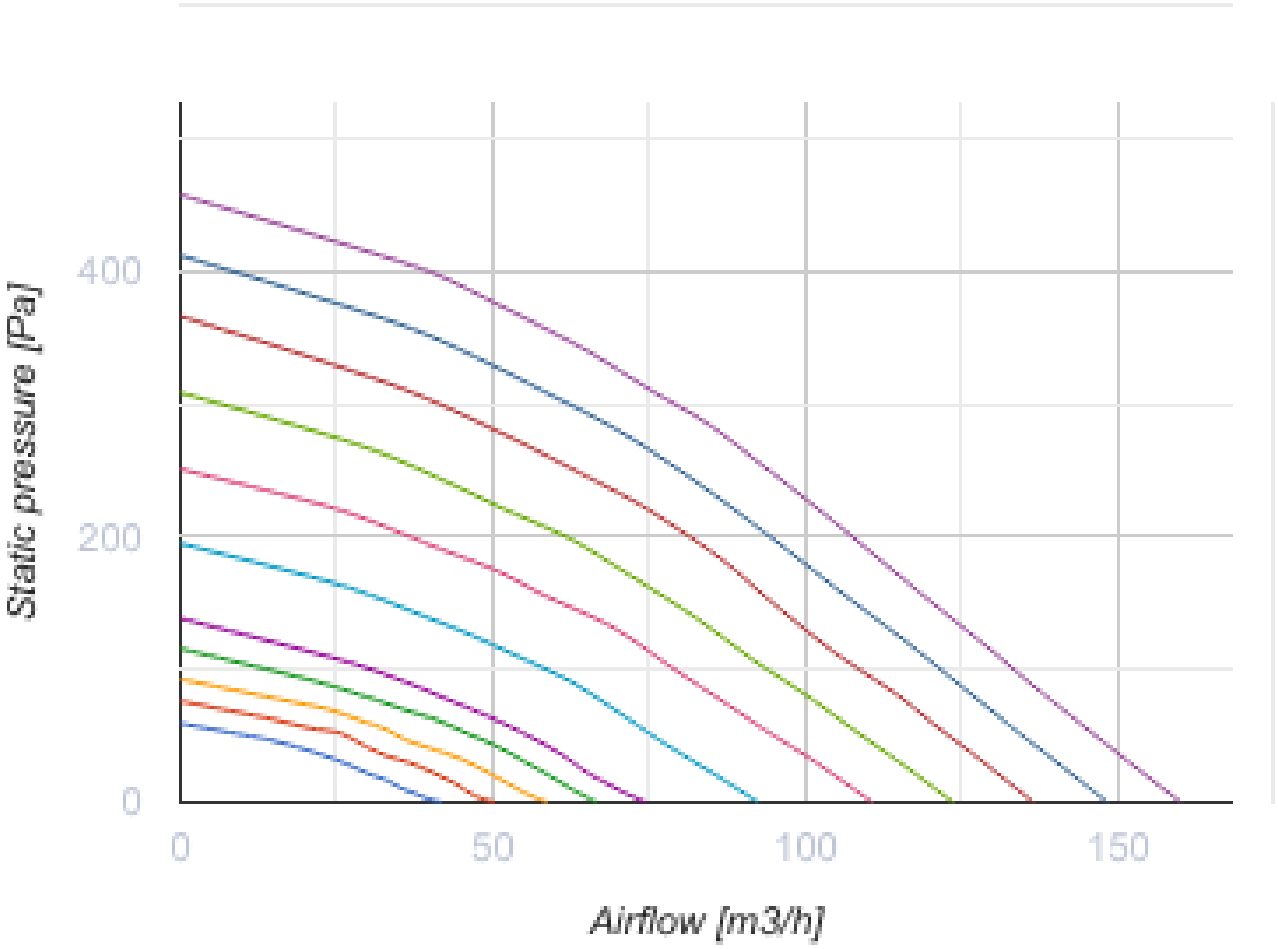

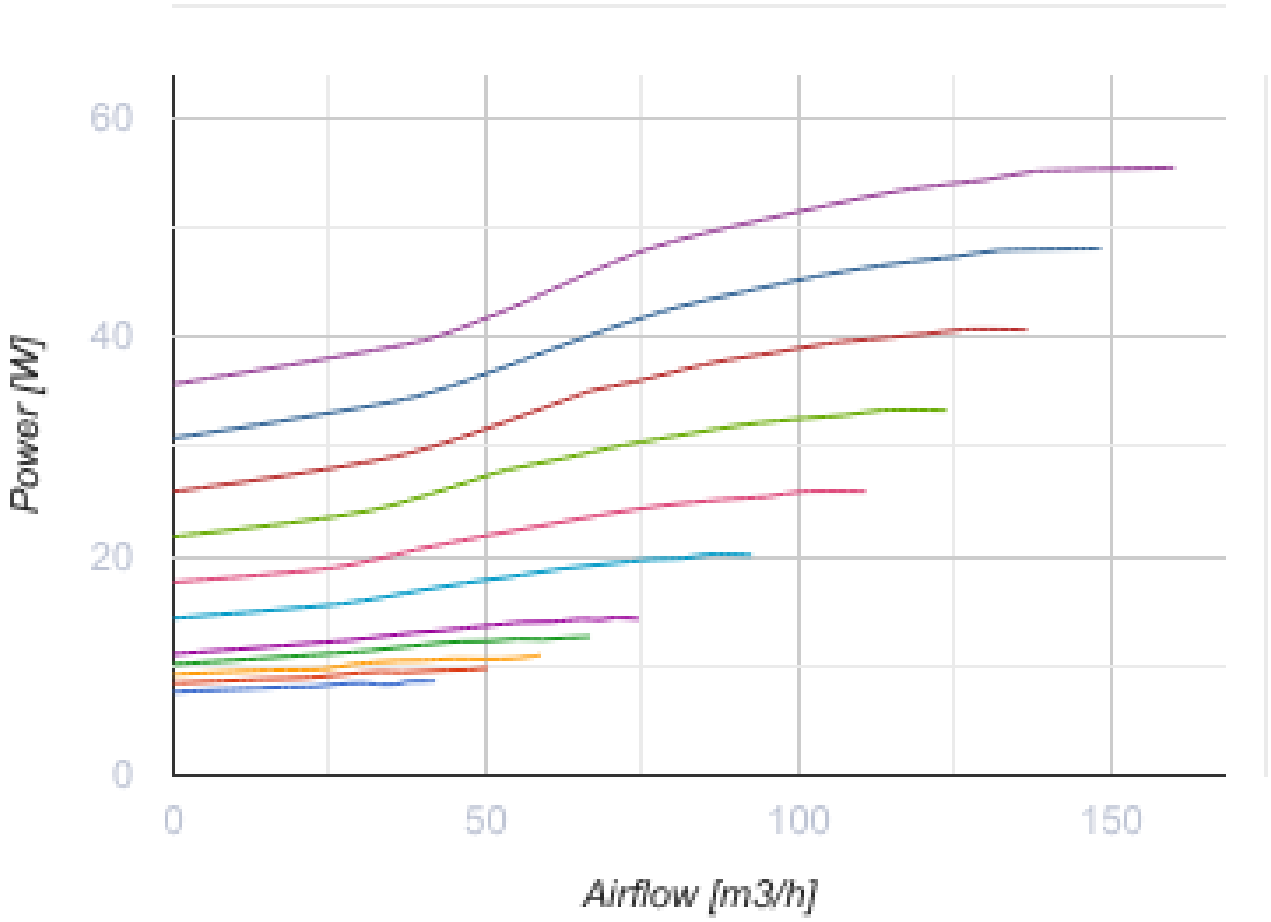

Dimensions

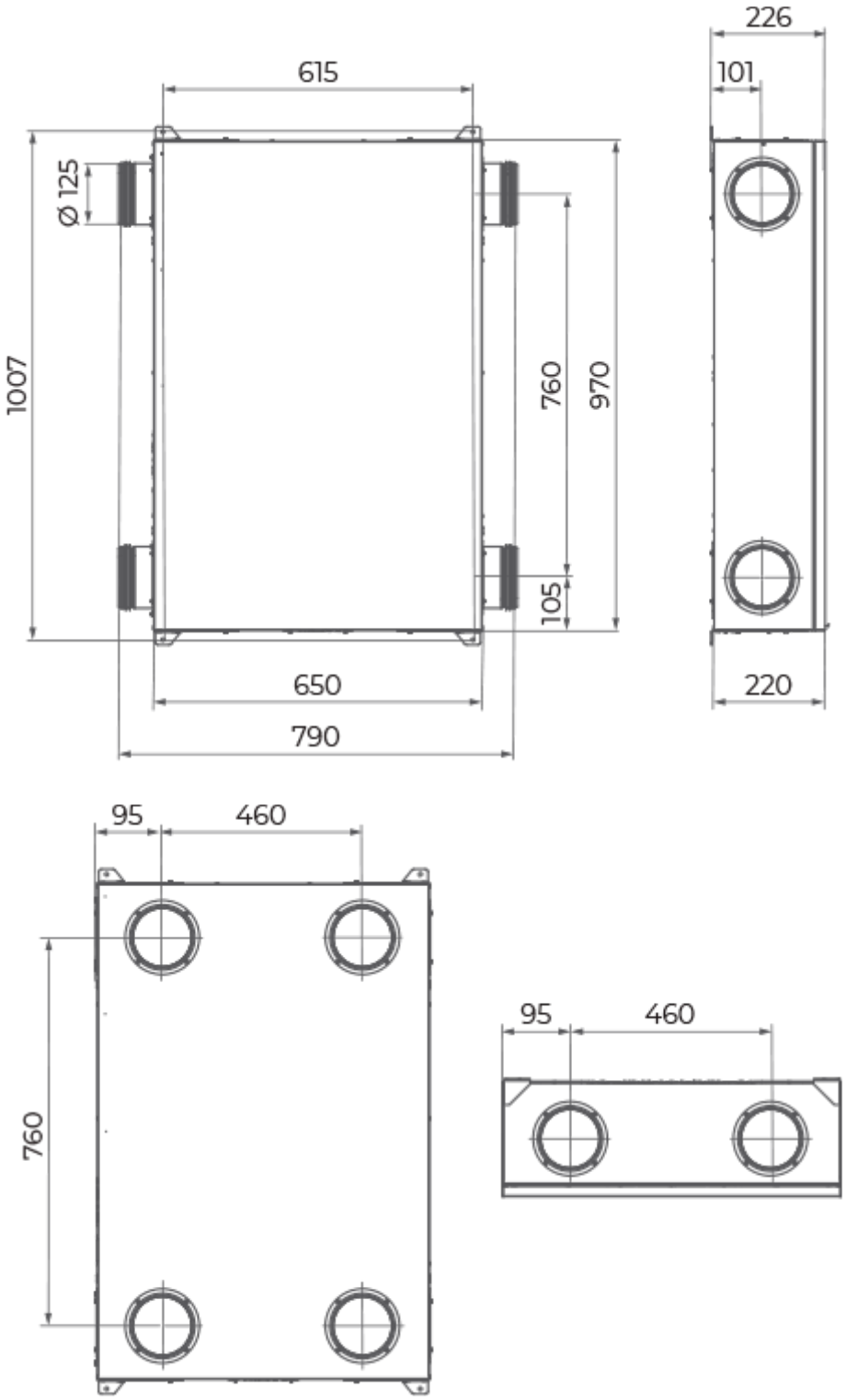

Accessories

Sensors

Name	Photo	Description
HV2		Humidity sensor

CO2-1		CO2 sensors
CO2-2		CO2 sensors
HR-S		Electro-mechanical humidistat
CO2-3		CO2 sensor

Electrical heaters

Name	Photo	Description
NKD 125-0,6-1 A21 V.2		Inline supply air reheaters with external control
NKD 125-0,8-1 A21 V.2		Inline supply air reheaters with external control
NKD 125-1,2-1 A21 V.2		Inline supply air reheaters with external control

Other accessories

Name	Photo	Description
SF 233x175x22 G4		Panel filter G4
SF 233x175x22 F7		F7 panel filter

Ecodesign

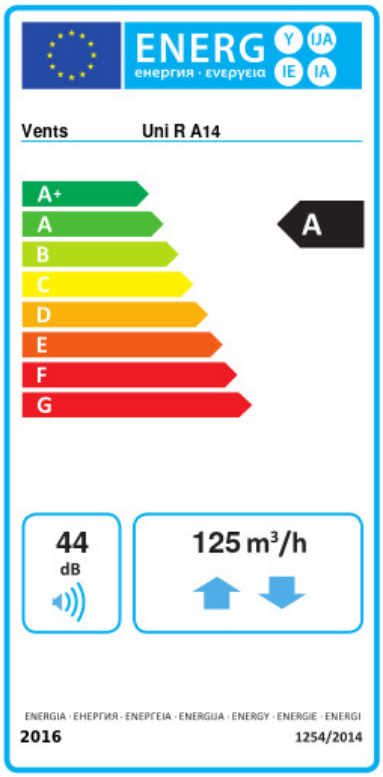

Trademark	Vents					
Model	Uni R A14					
Specific energy consumption (SEC) (kWh/(m²/a))	Cold		Average		Warm	
	-78.8	A+	-41	A	-16.8	E
Type of ventilation unit	Bidirectional					
Type of drive installed	Variable speed					
Type of heat recovery system	Recuperative					
Thermal efficiency of heat recovery (%)	81					
Maximum flow rate (m³/h)	125					
Electric power input (W)	52					
Reference flow rate (m³/s)	0.027					
Reference pressure difference (Pa)	50					
Specific power input (SPI) (W/(m³/h))	0.271					
Control typology	Local demand control					
Maximum internal leakage rates (%)	2.7					
Maximum external leakage rates (%)	2.7					
Airflow sensitivity at +20 Pa and -20 Pa (%)	0					
Declared typology	RVU BVU					
Sound power level (dB(A))	44					
The annual electricity consumption (AEC) (kWh/a)	Cold		Average		Warm	
	725		188		143	
The annual heating saved (AHS) (kWh/a)	Cold		Average		Warm	
	8817		4507		2038	