Uni ERV R A21

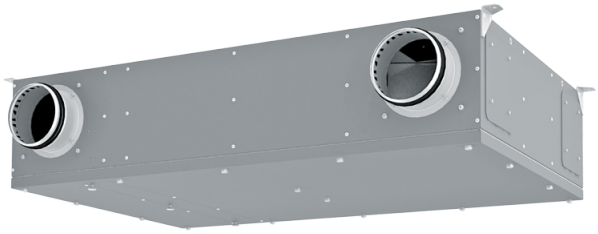

Hybrid decentralized universal installation type unit for single-room apartments with an air flow of up to 160 m³/h

- Sound pressure level LpA at 3 m: 33
- Sound pressure level LpA at 1 m: 42
- Heat exchanger type: Plate counterflow
- Heat exchanger material: Profiled polystyrene plates
- Supply filter: ePM1 70% / F7 (G4 option)
- Extract filter: Coarse 90% / G4
- Sound-insulated casing
- Enthalpy heat exchanger
- Bypass: Auto
- BMS protocol: ModBus
- Control: Smartphone
- Casing material: Galvanized steel
- Humidity sensor: Optional
- CO2 sensor: Optional
- PM2.5 sensor: Optional
- Temperature sensor: Built-in

	Unit of measurement	Uni ERV R A21		
Connected air duct size	mm	125		
Phases	-	1		
Minimum supply voltage	V	230		
Maximum supply voltage	V	230		
Power supply frequency	Hz	50/60		
Rated power	W	58		
Unit current	A	0.5		
Maximum airflow	m³/h	60	90	160
Rotation speed at 50hz	-	2800		
Sound pressure level LpA at 3 m	dB(A)	33		
Sound pressure level LpA at 1 m	dB(A)	42		
Heat recovery efficiency, max	%	89		
Heat exchanger type	-	Plate counterflow		
Heat exchanger material	-	Profiled polystyrene plates		
Weight	kg	31		
Supply filter	-	ePM1 70% / F7 (G4 option)		
Extract filter	-	Coarse 90% / G4		
Transported air temperature (max)	°C	40		
Transported air temperature (min)	°C	-25		
Minimum wall thickness	mm	70		

Maximum wall thickness	mm	2000

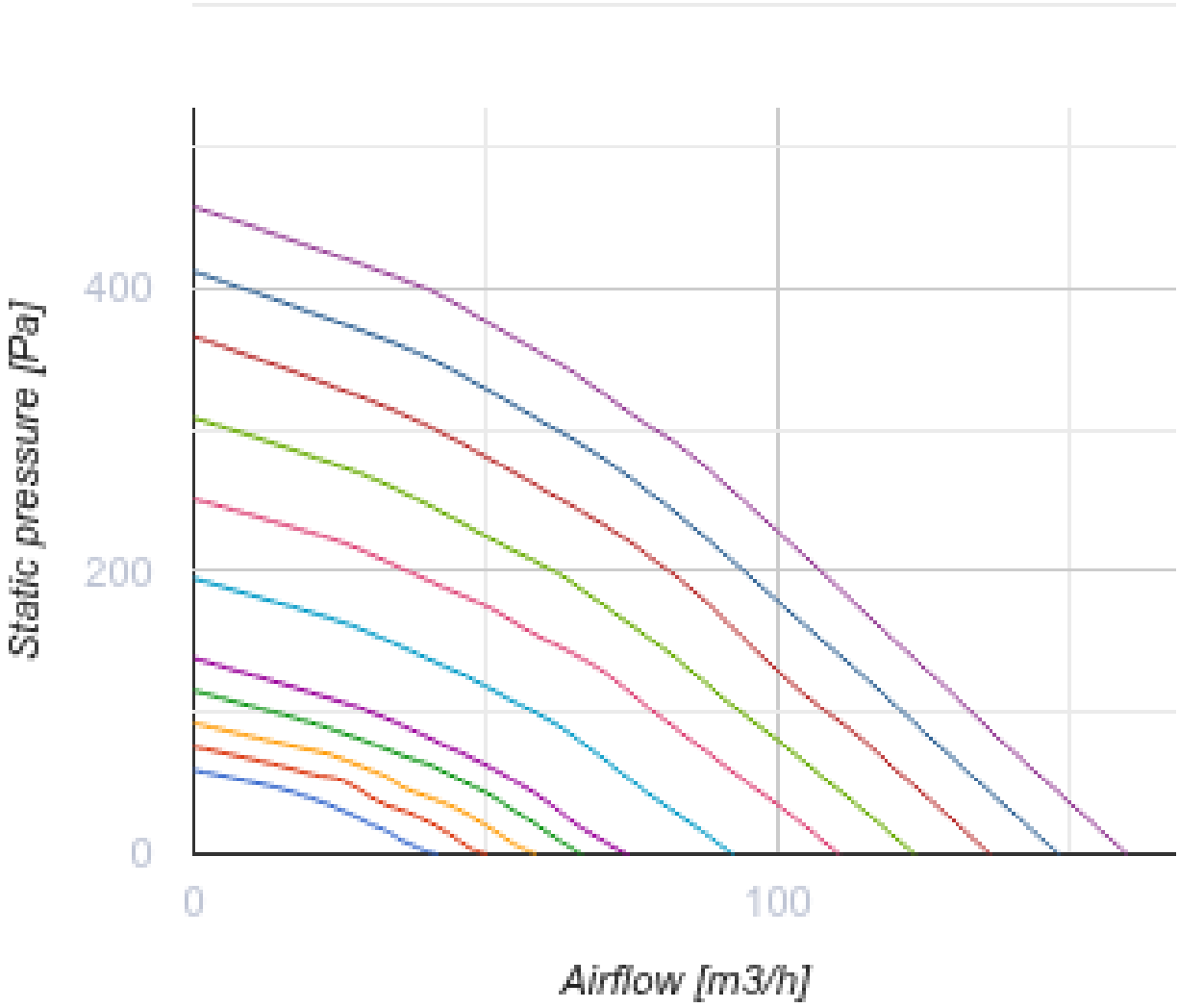

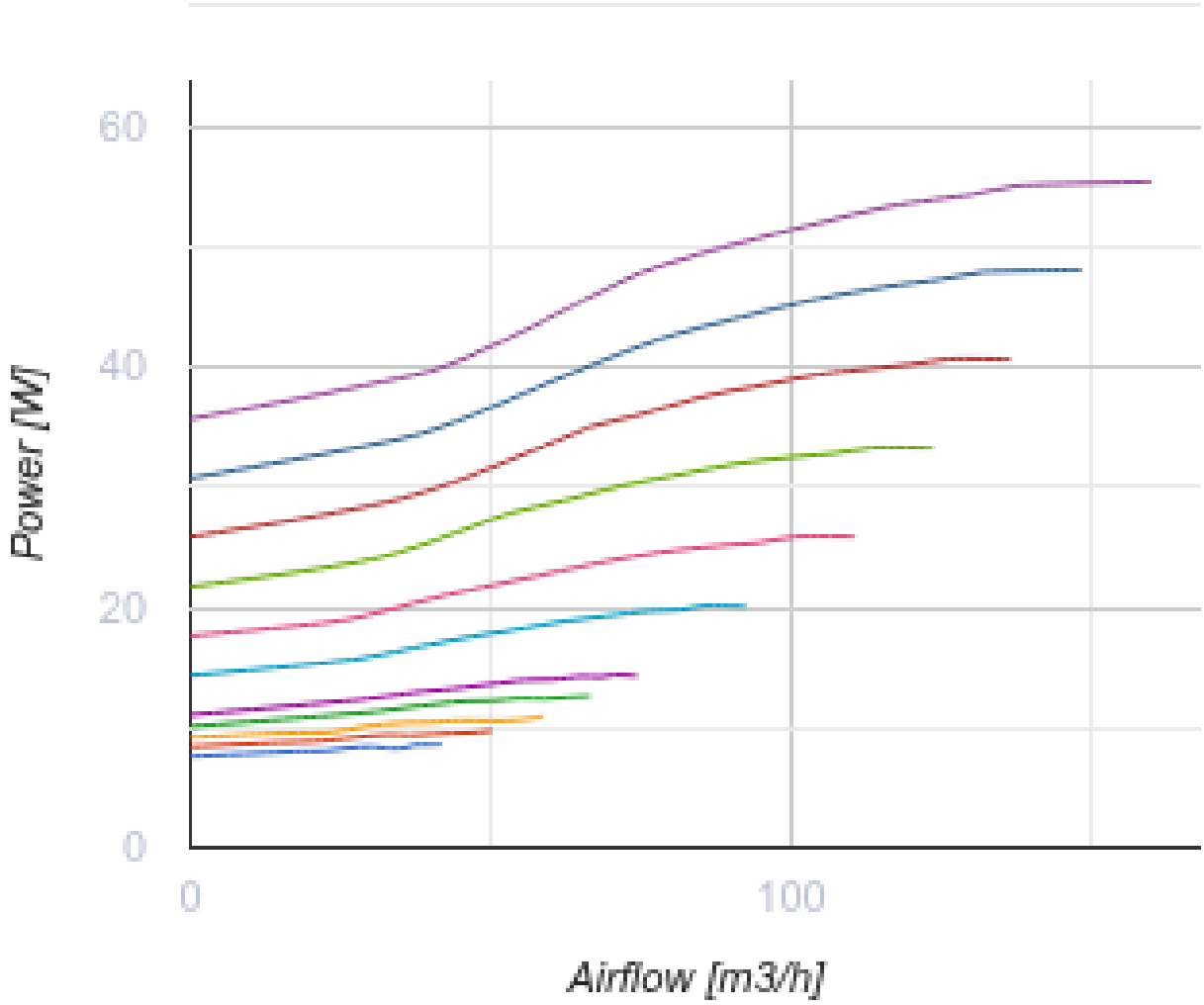

Dimensions

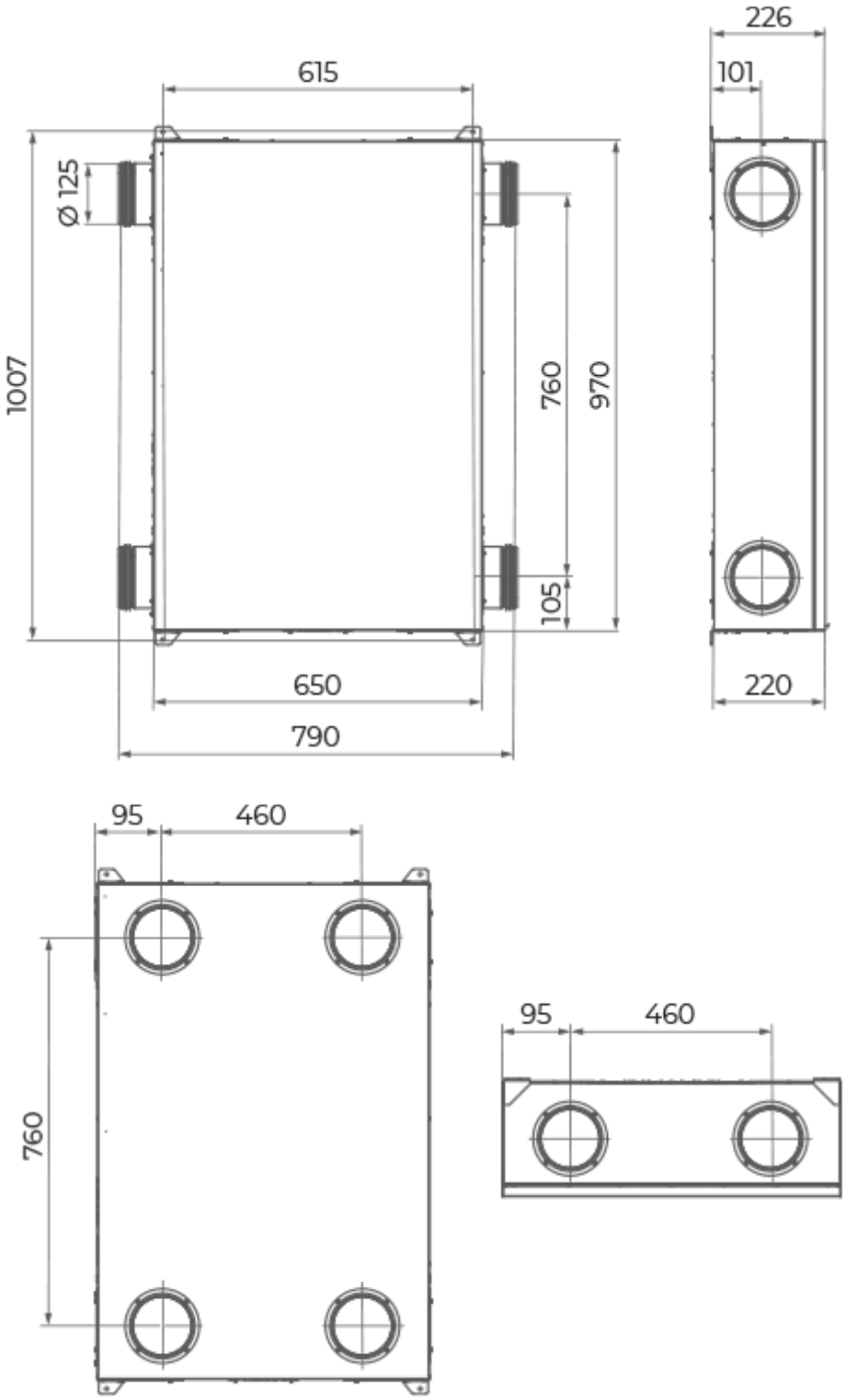

Accessories

Control Panels for AHU

Name	Photo	Description
A25		Touch screen control panel for controlling industrial and residential air handling units

A22		Control panels for controlling industrial and residential air handling units
A22 WiFi		Control panels for controlling industrial and residential air handling units

Sensors

Name	Photo	Description
HV2		Humidity sensor
CO2-1		CO2 sensors
CO2-2		CO2 sensors
HR-S		Electro-mechanical humidistat
DPWC11200		Humidity sensor
CO2-3		CO2 sensor

VOC sensors

Name	Photo	Description
DPWQ30600		VOC sensors
DPWQ40200		CO2 sensor

Electrical heaters

Name	Photo	Description
NKD 125-0,6-1 A21 V.2		Inline supply air reheaters with external control
NKD 125-0,8-1 A21 V.2		Inline supply air reheaters with external control

NKD 125-1,2-1 A21 V.2		Inline supply air reheaters with external control

Other accessories

Name	Photo	Description
SF 233x175x22 G4		Panel filter G4
SF 233x175x22 F7		F7 panel filter