Uni ERV R A14

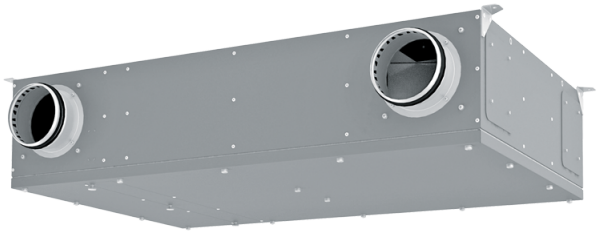

Hybrid decentralized universal installation type unit for single-room apartments with an air flow of up to 160 m³/h

- Sound pressure level LpA at 3 m: 33
- Sound pressure level LpA at 1 m: 42
- Heat exchanger type: Plate counterflow
- Heat exchanger material: Profiled polystyrene plates
- Supply filter: ePM1 70% / F7 (G4 option)
- Extract filter: Coarse 90% / G4
- Sound-insulated casing
- Enthalpy heat exchanger
- Bypass: Auto
- BMS protocol: ModBus
- Control: Smartphone
- Casing material: Galvanized steel
- Humidity sensor: Optional
- CO2 sensor: Optional
- PM2.5 sensor: Optional
- Temperature sensor: Built-in

	Unit of measurement	Uni ERV R A14		
Connected air duct size	mm	125		
Phases	-	1		
Minimum supply voltage	V	230		
Maximum supply voltage	V	230		
Power supply frequency	Hz	50/60		
Rated power	W	58		
Unit current	A	0.5		
Maximum airflow	m³/h	60	90	160
Rotation speed at 50hz	-	2800		
Sound pressure level LpA at 3 m	dB(A)	33		
Sound pressure level LpA at 1 m	dB(A)	42		
Heat recovery efficiency, max	%	89		
Heat exchanger type	-	Plate counterflow		
Heat exchanger material	-	Profiled polystyrene plates		
Weight	kg	31		
Supply filter	-	ePM1 70% / F7 (G4 option)		
Extract filter	-	Coarse 90% / G4		
Transported air temperature (max)	°C	40		
Transported air temperature (min)	°C	-25		
Minimum wall thickness	mm	70		

Maximum wall thickness	mm	2000

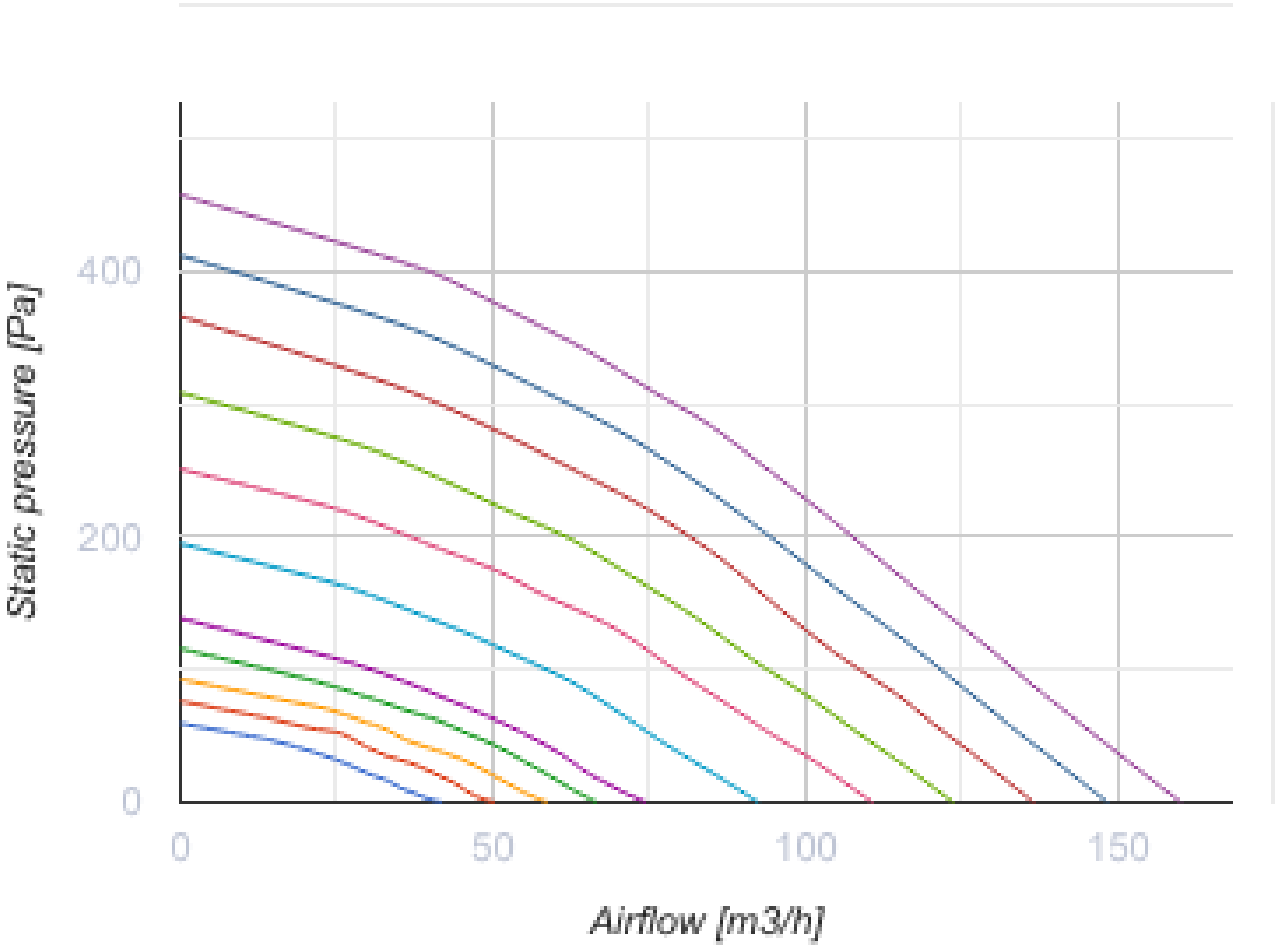

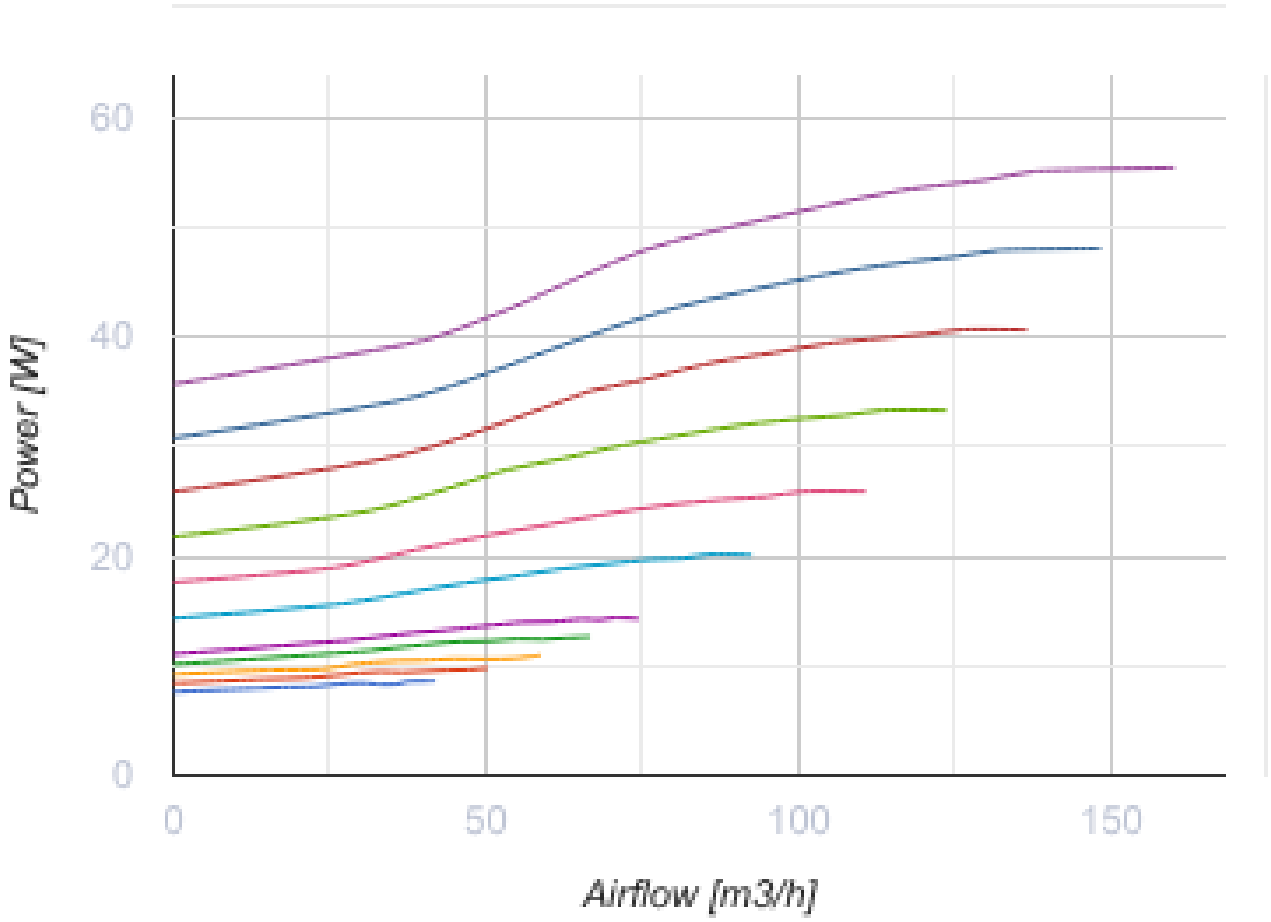

Dimensions

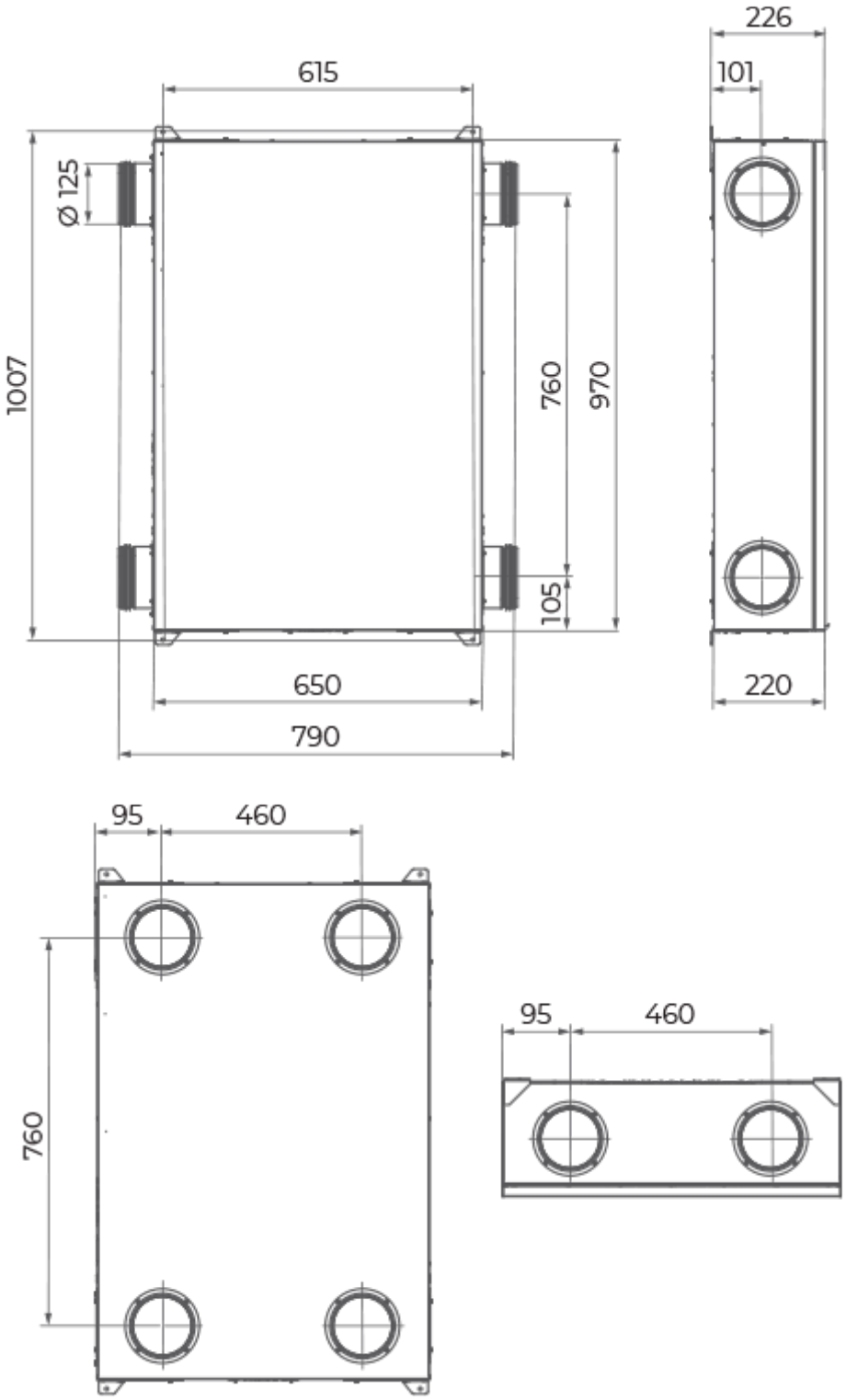

Accessories

Sensors

Name	Photo	Description
HV2		Humidity sensor

CO2-1		CO2 sensors
CO2-2		CO2 sensors
HR-S		Electro-mechanical humidistat
CO2-3		CO2 sensor

Electrical heaters

Name	Photo	Description
NKD 125-0,6-1 A21 V.2		Inline supply air reheaters with external control
NKD 125-0,8-1 A21 V.2		Inline supply air reheaters with external control
NKD 125-1,2-1 A21 V.2		Inline supply air reheaters with external control

Other accessories

Name	Photo	Description
SF 233x175x22 G4		Panel filter G4
SF 233x175x22 F7		F7 panel filter