TwinFresh Comfo RA1-85-2 V.3

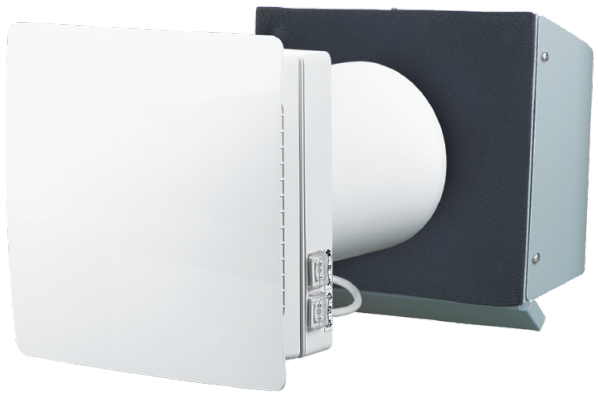

Single-room HRV unit with ceramic heat exchanger and remote control with an air flow of 85 m³/h. This model is supplied to international markets only. For United States customers, please visit vents-us.com product website

- Air flow in heat recovery mode: 43
- Sound pressure level LpA at 3 m: 34
- Sound pressure level LpA at 1 m: 44
- Heat exchanger type: Regenerative
- Heat exchanger material: Ceramic
- Filter: G3 (G4 F7 optional)
- Sound-insulated casing
- Control: Remote Control
- Casing material: Plastic
- Humidity sensor: Built-in

	Unit of measurement	TwinFresh Comfo RA1-85-2 V.3		
Phases	-	1		
Maximum supply voltage	V	240		
Minimum supply voltage	V	100		
Power supply frequency	Hz	50/60		
Rated power	W	4.74	6.56	9.65
Unit current	A	0.034	0.050	0.071
Air flow in ventilation mode	m³/h	36	59	85
Air flow in heat recovery mode	m³/h	18	30	43
Rotation speed at 50hz	-	1000	1500	2045
Sound pressure level LpA at 3 m	dB(A)	19	25	34
Sound pressure level LpA at 1 m	dB(A)	29	35	44
Heat recovery efficiency, max	%	90		
Heat exchanger type	-	Regenerative		
Heat exchanger material	-	Ceramic		
Filter	-	G3 (G4 F7 optional)		
Transported air temperature (max)	°C	40		
Transported air temperature (min)	°C	-20		
Ambient air temperature min	°C	1		
Ambient air temperature max	°C	40		

Ingress protection rating	-	IP24
Ambient air humidity max	%	65
Minimum wall thickness	mm	120
Maximum wall thickness	mm	300

Dimensions

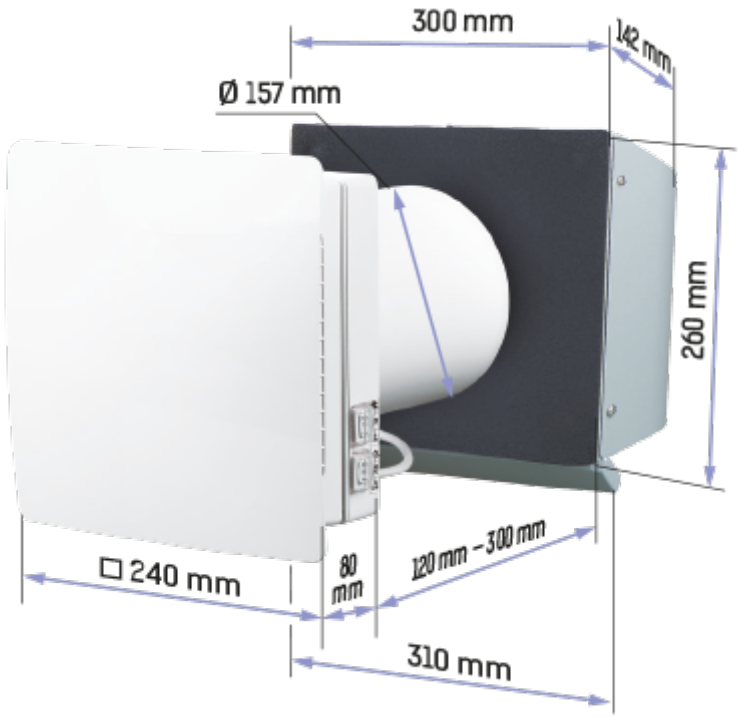

Accessories

Metal

Name	Photo	Description
MVMO 150 bV1s An		Single-row flanged metal grilles with angled louvers, optional flange

Hoods

Name	Photo	Description
EH-2 chrome 160		Outer hood for thin walls
EH-2 grey 160		Outer hood for thin walls

Other accessories

Name	Photo	Description
EH-13 chrome 160		Outer hood for cold climate
EH-13 white 160		Outer hood for cold climate
RC TwinFresh Comfo R-50		Remote control
SFC 150x50 F7		Filter
SFC 150x50 G4		Filter
TwinFresh R-50		Kit for pre-installation
TwinFresh Comfo RA1-50 V.3 completion kit		Completion kit (for the TwinFresh Comfo RA1-50 V.3 model)

Plastic

Name	Photo	Description
EH-14 beige 160		Plastic outer hood
EH-14 black 160		Plastic outer hood
EH-14 brown 160		Plastic outer hood
EH-14 chrome 160		Plastic outer hood
EH-14 grey 160		Plastic outer hood
EH-14 terracotta 160		Plastic outer hood

EH-14 white 160		Plastic outer hood
EH-17 beige 160		Plastic outer hood
EH-17 black 160		Plastic outer hood
EH-17 brown 160		Plastic outer hood
EH-17 grey 160		Plastic outer hood
EH-17 terracotta 160		Plastic outer hood
EH-17 white 160		Plastic outer hood
MVVM 162 05		Outer ventilation hood

Flat duct

Name	Photo	Description
3810		Wall mounting
3805		Wall mounting