TwinFresh Atmo Wi-Fi C1 L035 22

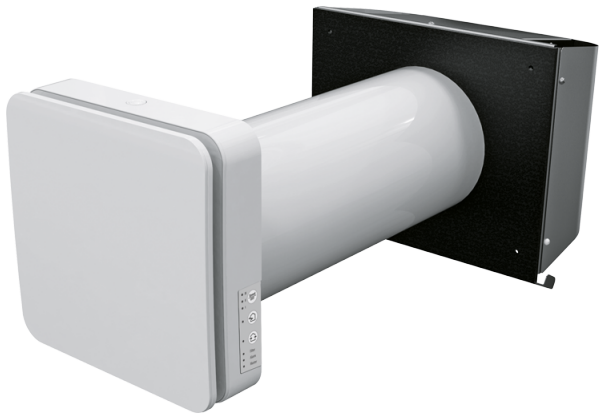

TwinFresh Atmo – is a brand new dMVHR solutions for newbuild and retrofit single-room applications, offer efficient and cost-effective ventilation

- Air flow in heat recovery mode: 25
- Sound pressure level LpA at 3 m: 27
- Sound pressure level LpA at 1 m: 36
- Heat exchanger type: Regenerative
- Heat exchanger material: Ceramic
- Filter: ISO Coarse >50% (G3) (ISO Coarse >60% (G4), ISO ePM1 60% (F7) optional)
- Sound-insulated casing
- Enthalpy heat exchanger
- Control: Built-in control panel, Wireless control panel, Remote Control
- Humidity sensor: Optional
- CO2 sensor: Optional
- Shutters

	Unit of measurement	TwinFresh Atmo Wi-Fi C1 L035 22		
Maximum supply voltage	V	240		
Minimum supply voltage	V	100		
Power supply frequency	Hz	50/60		
Rated power	W	1.1	2	3.4
Unit current	A	0.03	0.04	0.05
Air flow in ventilation mode	m³/h	15	35	50
Air flow in heat recovery mode	m³/h	8	15	25
Sound pressure level LpA at 3 m	dB(A)	11	21	27
Sound pressure level LpA at 1 m	dB(A)	20	30	36
Heat recovery efficiency	%	95		
Heat exchanger type	-	Regenerative		
Heat exchanger material	-	Ceramic		
Filter	-	ISO Coarse >50% (G3) (ISO Coarse >60% (G4), ISO ePM1 60% (F7) optional)		
Transported air temperature (max)	°C	55		
Transported air temperature (min)	°C	-20		
Ingress protection rating	-	IP24		
Minimum wall thickness	mm	110		
Maximum wall thickness	mm	340		

Dimensions

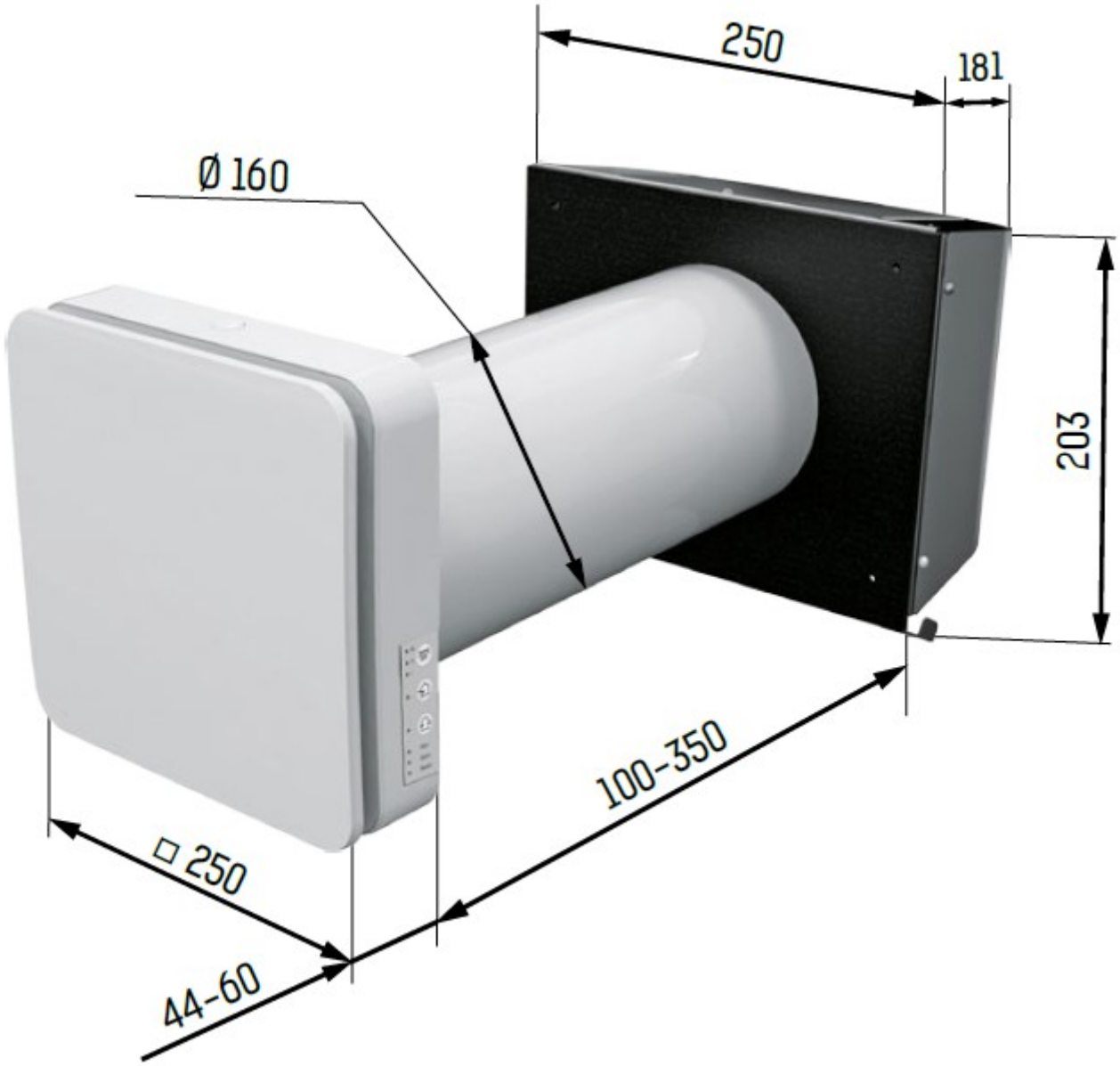

Accessories

Hoods

Name	Photo	Description
EH-2 chrome 160		Outer hood for thin walls
EH-2 grey 160		Outer hood for thin walls

Plastic

Name	Photo	Description
MVVM 162 05		Outer ventilation hood

Other accessories

Name	Photo	Description
SF2 TwinFresh G4		Coarse filter G4 Contents: • plastic filter holder (1 pc.) • G4 filter (1 pc.)
SF2 TwinFresh F7		Fine filter F7 Contents: • plastic filter holder (1 pc.) • F7 filter (1 pc.) The F7 filter reduces air flow to 40 m³/h
RC TwinFresh Atmo		Remote control
SFC2 TwinFresh G3		G3 filter kit (2 pcs.)
NP 60x204-0021		Kit for angular mounting with white colour grille
NP 60x204-0082		Kit for angular mounting with stainless steel outer grille
Atmo Interia black		Decorative textile overlay (1 piece) for TF Design
Atmo Interia grey		Decorative textile overlay (1 piece) for TF Design
Atmo Interia navy blue		Decorative textile overlay (1 piece) for TF Design
Atmo Interia beige-pink		Decorative textile overlay (1 piece) for TF Design
Atmo Interia cream		Decorative textile overlay (1 piece) for TF Design
Atmo Interia violet		Decorative textile overlay (1 piece) for TF Design

Flat duct

Name	Photo	Description
3810		Wall mounting
3805		Wall mounting

Ecodesign

Trademark	Vents					
Model	TwinFresh Atmo Wi-Fi C1 L035 22					
Specific energy consumption (SEC) (kWh/(m²/a))	Cold		Average		Warm	
	-88.2	A+	-44.7	A+	-19.8	E
Type of ventilation unit	Bidirectional					
Type of drive installed	Variable speed					
Type of heat recovery system	Regenerative					
Thermal efficiency of heat recovery (%)	85					
Maximum flow rate (m³/h)	50					
Electric power input (W)	3.4					
Reference flow rate (m³/s)	0.01					
Specific power input (SPI) (W/(m³/h))	0.57					
Control typology	Local demand control					
Maximum internal leakage rates (%)	2.7					
Mixing rate (%)	1					
Sound power level (dB(A))	41					
Declared typology	RVU BVU					
The annual electricity consumption (AEC) (kWh/a)	Cold		Average		Warm	
	31		31		31	
The annual heating saved (AHS) (kWh/a)	Cold		Average		Warm	
	8695		4445		2010	