TT Silent-M 315 U



Mixed-flow inline fans in sound-insulated casing

- Sound pressure level LpA at 3 m: 40
- Sound-insulated casing
- Control: Built-in speed controller
- Impeller type: Mixed-flow
- Casing material: Coated steel
- Installation in any position
- Cable with mains plug
- Temperature sensor

	Unit of measurement	TT Silent-M 315 U	
Speed	-	1	2
Connected air duct size	mm	315	
Phases	-	1	
Minimum supply voltage	V	230	
Maximum supply voltage	V	230	
Power supply frequency	Hz	50/60	
Rated power	W	230	320
Unit current	A	1	1.42
Maximum airflow	m³/h	1570	2050
Rotation speed at 50hz	-	1890	2430
Sound pressure level LpA at 3 m	dB(A)	36	40
Weight	kg	29.6	
Transported air temperature (max)	°C	60	
Ingress protection rating	-	IPX4	
Ingress protection rating of the drive	-	IPX4	
Impeller material	-	Plastic	

Dimensions

ØD	B	B1	H	L	L1
313	450	526	434	785	180

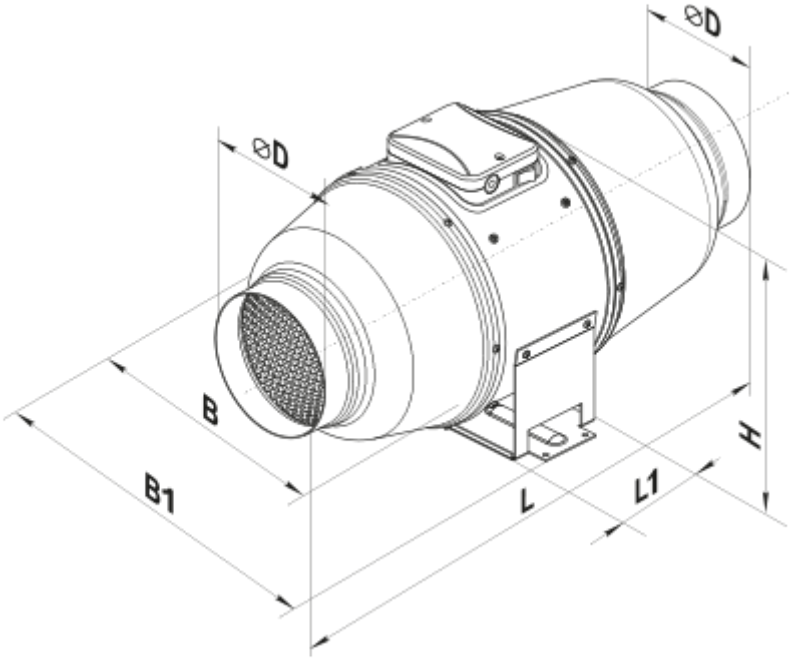

Accessories

For round ducts

Name	Photo	Description
SR 315/1200		Silencers made of galvanized steel filled with non-combustible sound-absorbing material
SRF 315/900		Silencers made of aluminium alloy filled with non-combustible sound-absorbing material
SRF 315/2000		Silencers made of aluminium alloy filled with non-combustible sound-absorbing material
SRP 315/500		Silencers with an internal flexible air duct made of micro-perforated aluminium foil laminated with polyester film
SRP 315/600		Silencers with an internal flexible air duct made of micro-perforated aluminium foil laminated with polyester film
SRP 315/750		Silencers with an internal flexible air duct made of micro-perforated aluminium foil laminated with polyester film
SRP 315/900		Silencers with an internal flexible air duct made of micro-perforated aluminium foil laminated with polyester film

SRP 315/1200		Silencers with an internal flexible air duct made of micro-perforated aluminium foil laminated with polyester film
SRP 315/1500		Silencers with an internal flexible air duct made of micro-perforated aluminium foil laminated with polyester film
SRP 315/2000		Silencers with an internal flexible air duct made of micro-perforated aluminium foil laminated with polyester film

For round ducts

Name	Photo	Description
FB 315		Round panel air filters
FBK 315-4	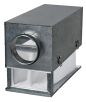	Round bag air filters
FBK 315-5	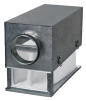	Round bag air filters
FBK 315-7		Round bag air filters

For round ducts

Name	Photo	Description
KOM 315		Backdraught damper with spring-loaded plates for shutting off air flow in round air ducts
KOMu 315		Backdraught damper with spring-loaded plates for shutting off air flow in round air ducts
KOM1 315		Backdraught gravity damper for shutting off air flow in round air ducts
KR 315		Air dampers for controlling air flow in round air ducts
KRV 315		Air dampers for automatic air flow control in round ducts

Water heaters

Name	Photo	Description

NKV 315-2		Inline water supply air heaters or heater for air handling units with a round cross-section
NKV 315-4		Inline water supply air heaters or heater for air handling units with a round cross-section

Electrical heaters

Name	Photo	Description
NK 315-1,2-1		Round electric inline heaters with round cross-section
NK 315-2,0-1		Round electric inline heaters with round cross-section
NK 315-2,4-1		Round electric inline heaters with round cross-section
NK 315-3,6-3		Round electric inline heaters with round cross-section
NK 315-6,0-3		Round electric inline heaters with round cross-section
NK 315-9,0-3		Round electric inline heaters with round cross-section

Ecodesign

Trademark	Vents
Model	TT Silent-M 315 U
Type of drive installed	External MSD or VSD
Type of heat recovery system	None
Nominal external pressure (Pa)	327
Maximum external leakage rates (%)	2.7
Static efficiency (%)	32.5
Sound power level (dB(A))	58
Effective electric power input (kW)	0.317
Declared typology	NRVU UVU