TT Silent-M 315 TR1V



Mixed-flow inline fans in sound-insulated casing

- Sound pressure level LpA at 3 m: 40
- Sound-insulated casing
- Control: Built-in speed controller
- Impeller type: Mixed-flow
- Casing material: Coated steel
- Installation in any position
- Cable with mains plug
- Timer: Turn off timer

	Unit of measurement	TT Silent-M 315 TR1V	
Speed	-	1	2
Connected air duct size	mm	315	
Phases	-	1	
Minimum supply voltage	V	230	
Maximum supply voltage	V	230	
Power supply frequency	Hz	50/60	
Rated power	W	230	320
Unit current	A	1	1.42
Maximum airflow	m^3/h	1570	2050
Rotation speed at 50hz	-	1890	2430
Sound pressure level LpA at 3 m	dB(A)	36	40
Weight	kg	29.6	
Transported air temperature (max)	°C	60	
Ingress protection rating	-	IPX4	
Ingress protection rating of the drive	-	IPX4	
Impeller material	-	Plastic	

Dimensions

ØD	B	B1	H	L	L1
313	450	526	434	785	180

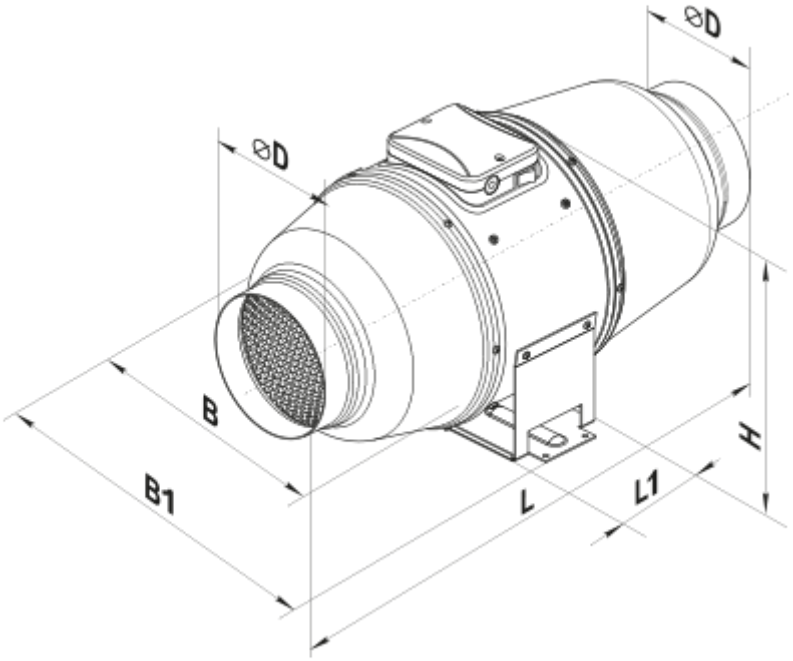

Ecodesign

Trademark	Vents
Model	TT Silent-M 315 TR1V
Type of drive installed	External MSD or VSD
Type of heat recovery system	None
Nominal external pressure (Pa)	327
Maximum external leakage rates (%)	2.7
Static efficiency (%)	32.5
Declared typology	NRVU UVU
Sound power level (dB(A))	58
Effective electric power input (kW)	0.317