TT Silent-M 315 EC



Mixed-flow inline fans in sound-insulated casing with EC-motors

- Sound pressure level LpA at 3 m: 45
- Sound-insulated casing
- Impeller type: Mixed-flow
- Casing material: Coated steel
- Installation in any position

	Unit of measurement	TT Silent-M 315 EC
Connected air duct size	mm	315
Phases	-	1
Maximum supply voltage	V	230
Minimum supply voltage	V	230
Power supply frequency	Hz	50/60
Rated power	W	232
Unit current	A	1.86
Maximum airflow	m^3/h	1810
Rotation speed at 50hz	-	2646
Sound pressure level LpA at 3 m	dB(A)	45
Weight	kg	19.8
Transported air temperature (max)	°C	55
Transported air temperature (min)	°C	-25
Ingress protection rating	-	IPX4
Impeller material	-	Plastic

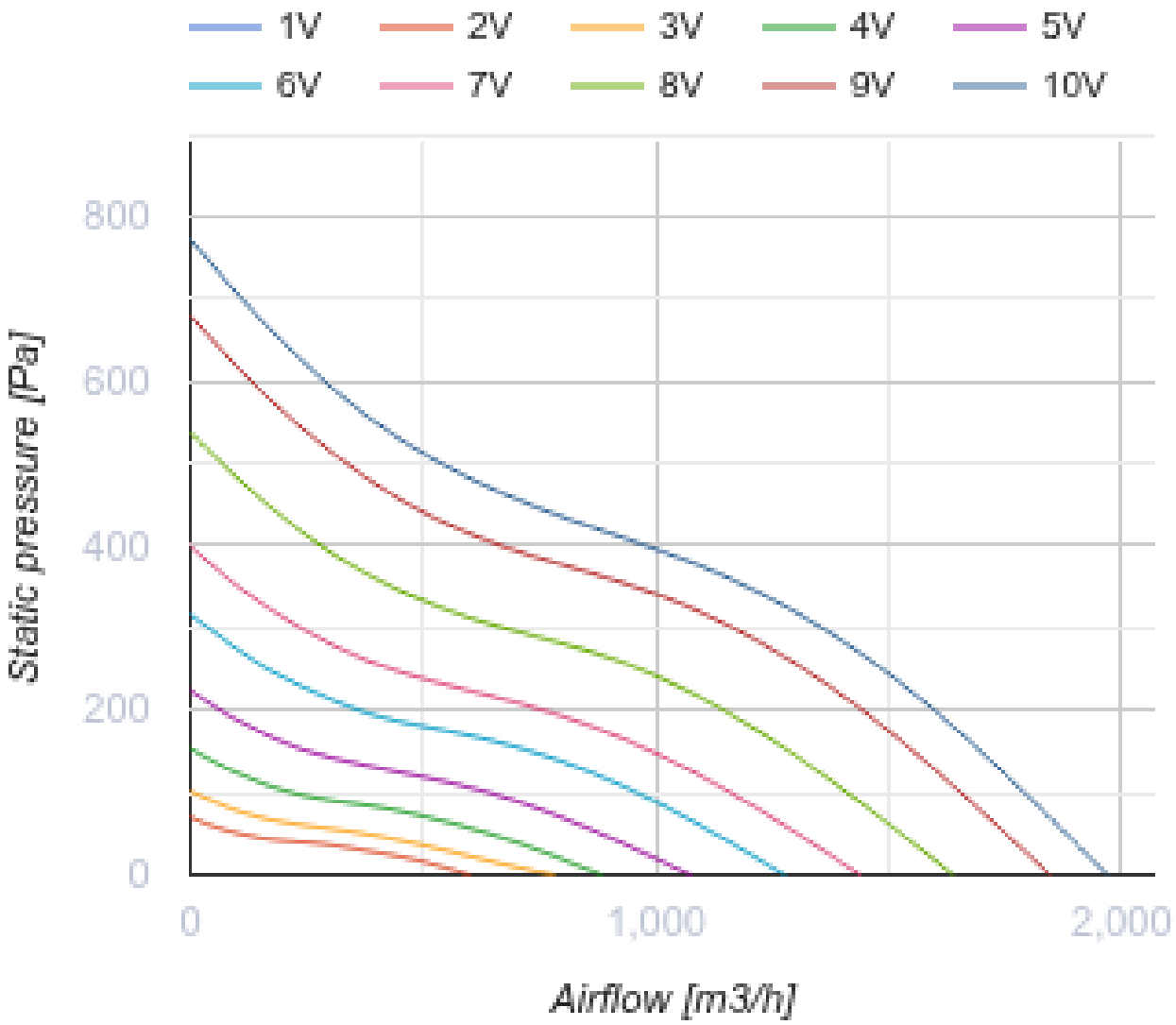
1V
2V
3V
4V
5V
6V
7V
8V
9V
10V
800
600
400
200
0
Static pressure [Pa]
0
1,000
2,000
Airflow [m3/h]

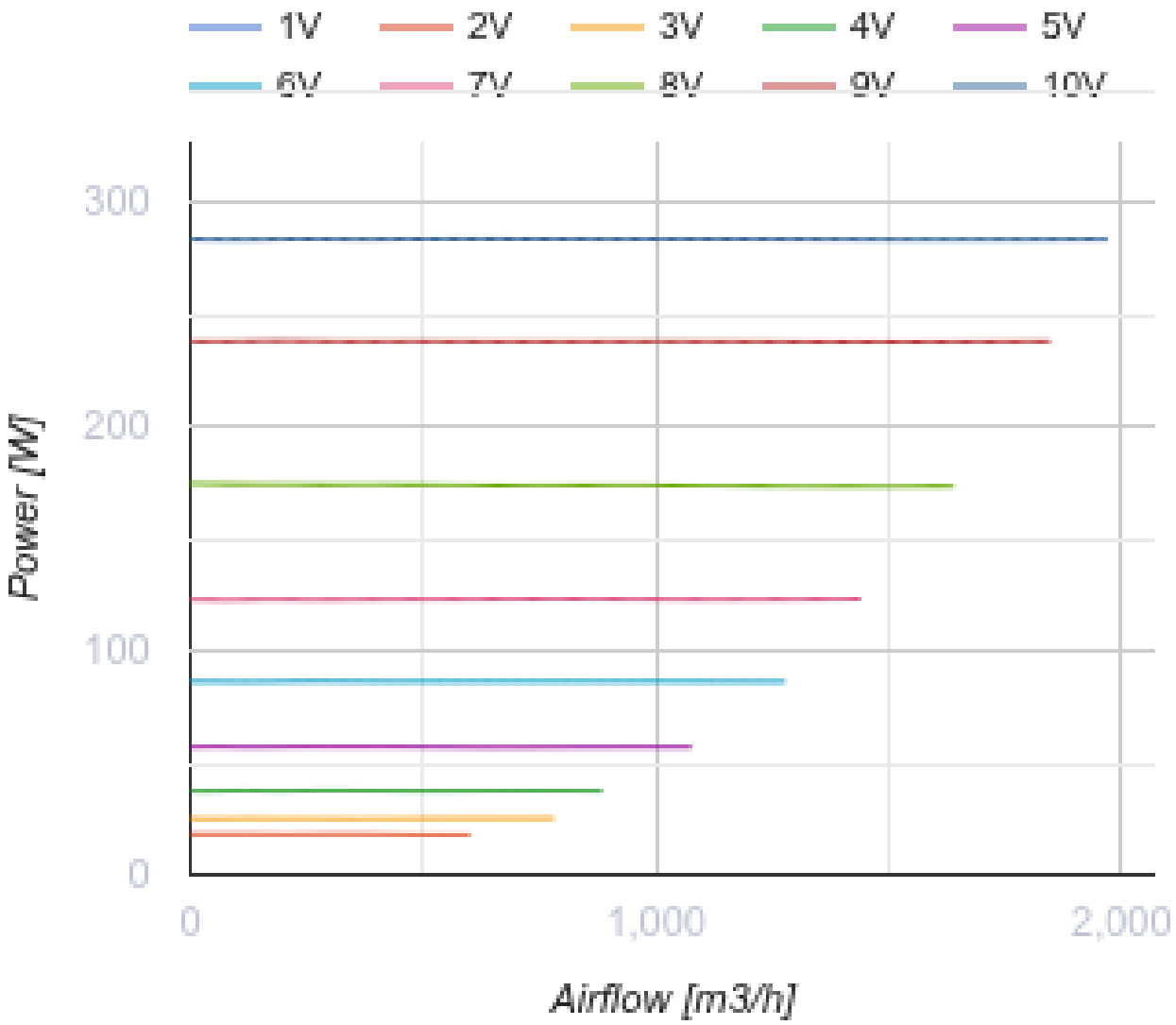

Dimensions

ØD	H	L	L1	W	W1
313	434	785	180	526	450

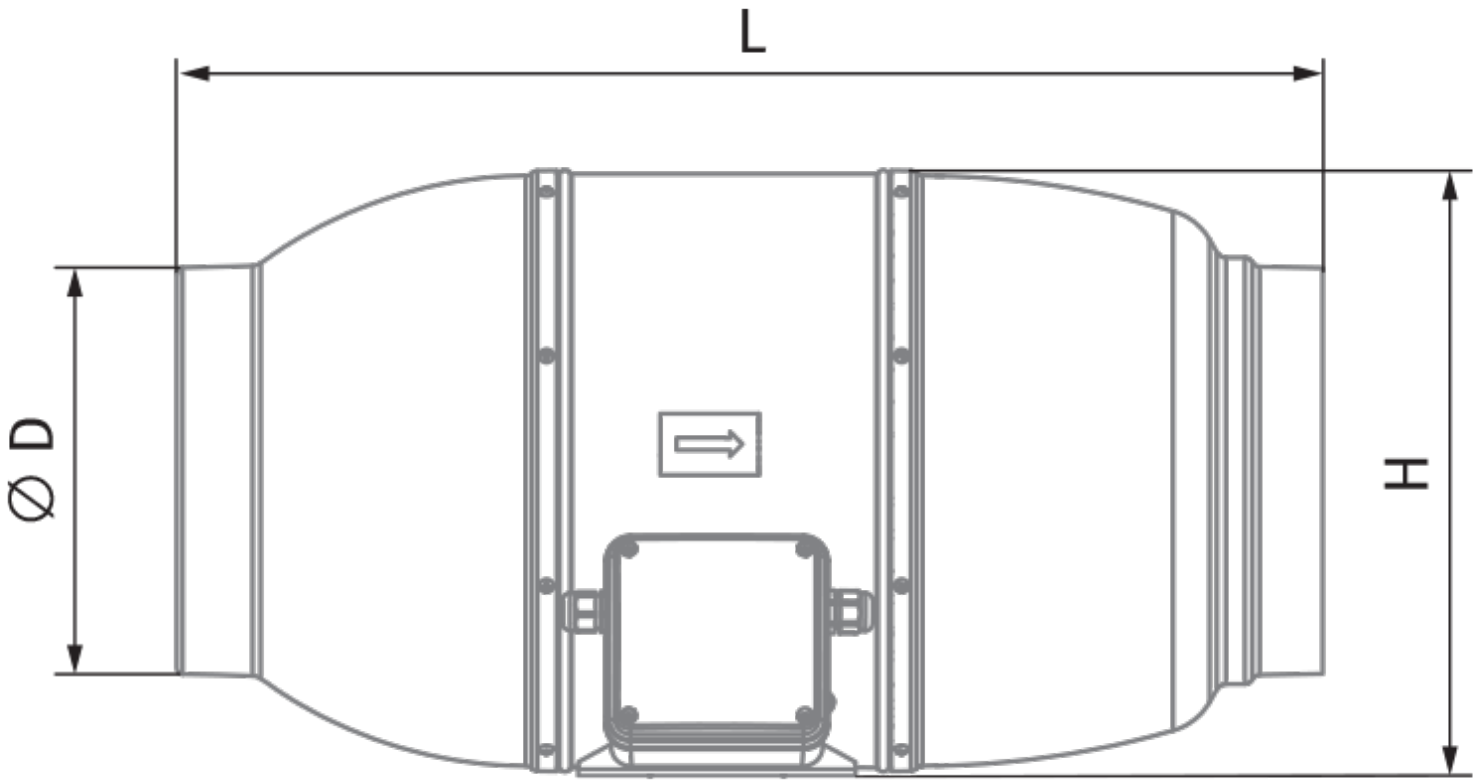
L
∅ D
H

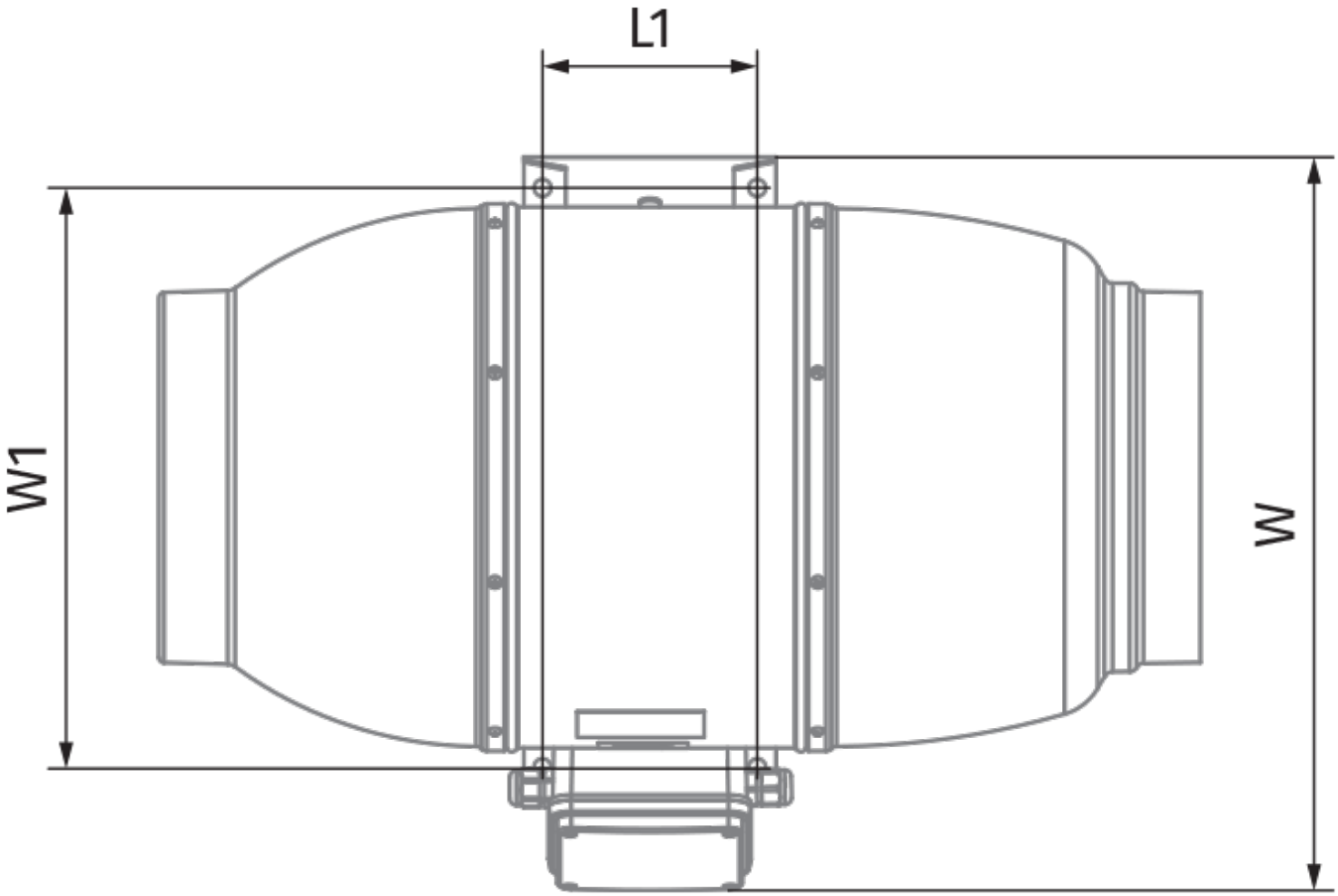

Accessories

For round ducts

Name	Photo	Description

SR 315/1200		Silencers made of galvanized steel filled with non-combustible sound-absorbing material
SRF 315/900		Silencers made of aluminium alloy filled with non-combustible sound-absorbing material
SRF 315/2000		Silencers made of aluminium alloy filled with non-combustible sound-absorbing material
SRP 315/500		Silencers with an internal flexible air duct made of micro-perforated aluminium foil laminated with polyester film
SRP 315/600		Silencers with an internal flexible air duct made of micro-perforated aluminium foil laminated with polyester film
SRP 315/750		Silencers with an internal flexible air duct made of micro-perforated aluminium foil laminated with polyester film
SRP 315/900		Silencers with an internal flexible air duct made of micro-perforated aluminium foil laminated with polyester film
SRP 315/1200		Silencers with an internal flexible air duct made of micro-perforated aluminium foil laminated with polyester film
SRP 315/1500		Silencers with an internal flexible air duct made of micro-perforated aluminium foil laminated with polyester film
SRP 315/2000		Silencers with an internal flexible air duct made of micro-perforated aluminium foil laminated with polyester film

For round ducts

Name	Photo	Description
FB 315		Round panel air filters
FBV 315		Round panel air filters with a large filtration area
FBK 315-4	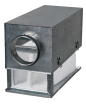	Round bag air filters
FBK 315-5		Round bag air filters

FBK 315-7		Round bag air filters

For round ducts

Name	Photo	Description
KOM 315		Backdraught damper with spring-loaded plates for shutting off air flow in round air ducts
KOMu 315		Backdraught damper with spring-loaded plates for shutting off air flow in round air ducts
KOM1 315		Backdraught gravity damper for shutting off air flow in round air ducts
KR 315		Air dampers for controlling air flow in round air ducts
KRV 315		Air dampers for automatic air flow control in round ducts

For round ducts

Name	Photo	Description
VVG 315	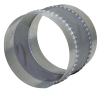	Flexible anti-vibration inserts for round ducts

Water heaters

Name	Photo	Description
NKV 315-2		Inline water supply air heaters or heater for air handling units with a round cross-section
NKV 315-4		Inline water supply air heaters or heater for air handling units with a round cross-section

Electrical heaters

Name	Photo	Description
NK 315-1,2-1		Round electric inline heaters with round cross-section
NK 315-2,0-1		Round electric inline heaters with round cross-section

NK 315-2,4-1		Round electric inline heaters with round cross-section
NK 315-3,6-3		Round electric inline heaters with round cross-section
NK 315-6,0-3		Round electric inline heaters with round cross-section
NK 315-9,0-3		Round electric inline heaters with round cross-section

Ecodesign

Trademark	Vents
Model	TT Silent-M 315 EC
Type of drive installed	Integrated VSD
Type of heat recovery system	None
Nominal external pressure (Pa)	371
Maximum external leakage rates (%)	2.7
Static efficiency (%)	46.6
Sound power level (dB(A))	66
Effective electric power input (kW)	0.283
Declared typology	NRVU UVU