TT Silent-M 250 TV



Mixed-flow inline fans in sound-insulated casing

- Sound pressure level LpA at 3 m: 38
- Sound-insulated casing
- Control: Built-in speed controller
- Impeller type: Mixed-flow
- Casing material: Coated steel
- Installation in any position
- Timer: Turn off timer

	Unit of measurement	TT Silent-M 250 TV	
Speed	-	1	2
Connected air duct size	mm	250	
Phases	-	1	
Minimum supply voltage	V	230	
Maximum supply voltage	V	230	
Power supply frequency	Hz	50/60	
Rated power	W	125	177
Unit current	A	0.54	0.79
Maximum airflow	m^3/h	1110	1400
Rotation speed at 50hz	-	1955	2440
Sound pressure level LpA at 3 m	dB(A)	34	38
Weight	kg	14.7	
Transported air temperature (max)	°C	60	
Ingress protection rating	-	IPX4	
Ingress protection rating of the drive	-	IPX4	
Impeller material	-	Plastic	

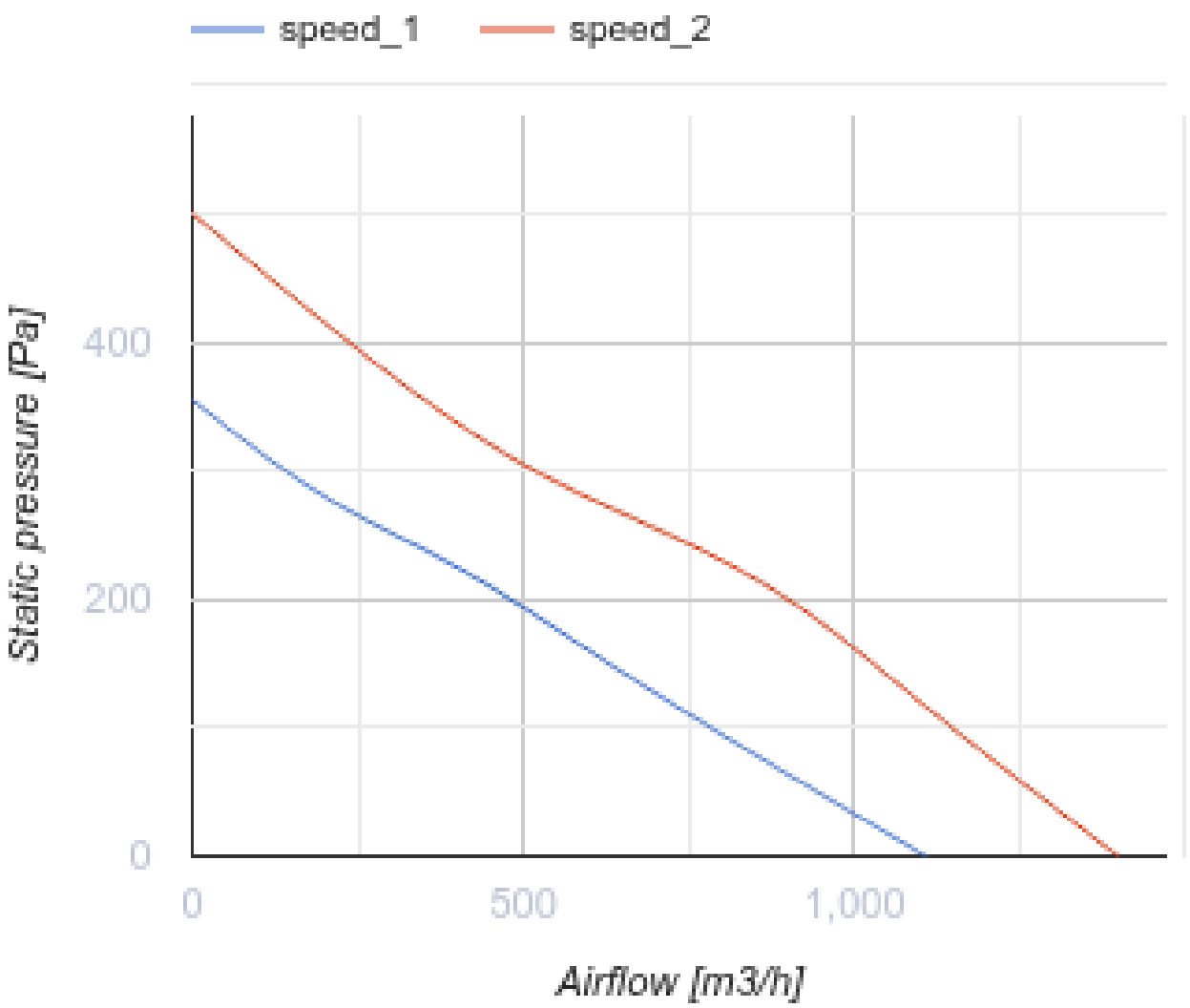
speed_1
speed_2
Static pressure [Pa]
400
200
0
0
500
1,000
Airflow [m3/h]

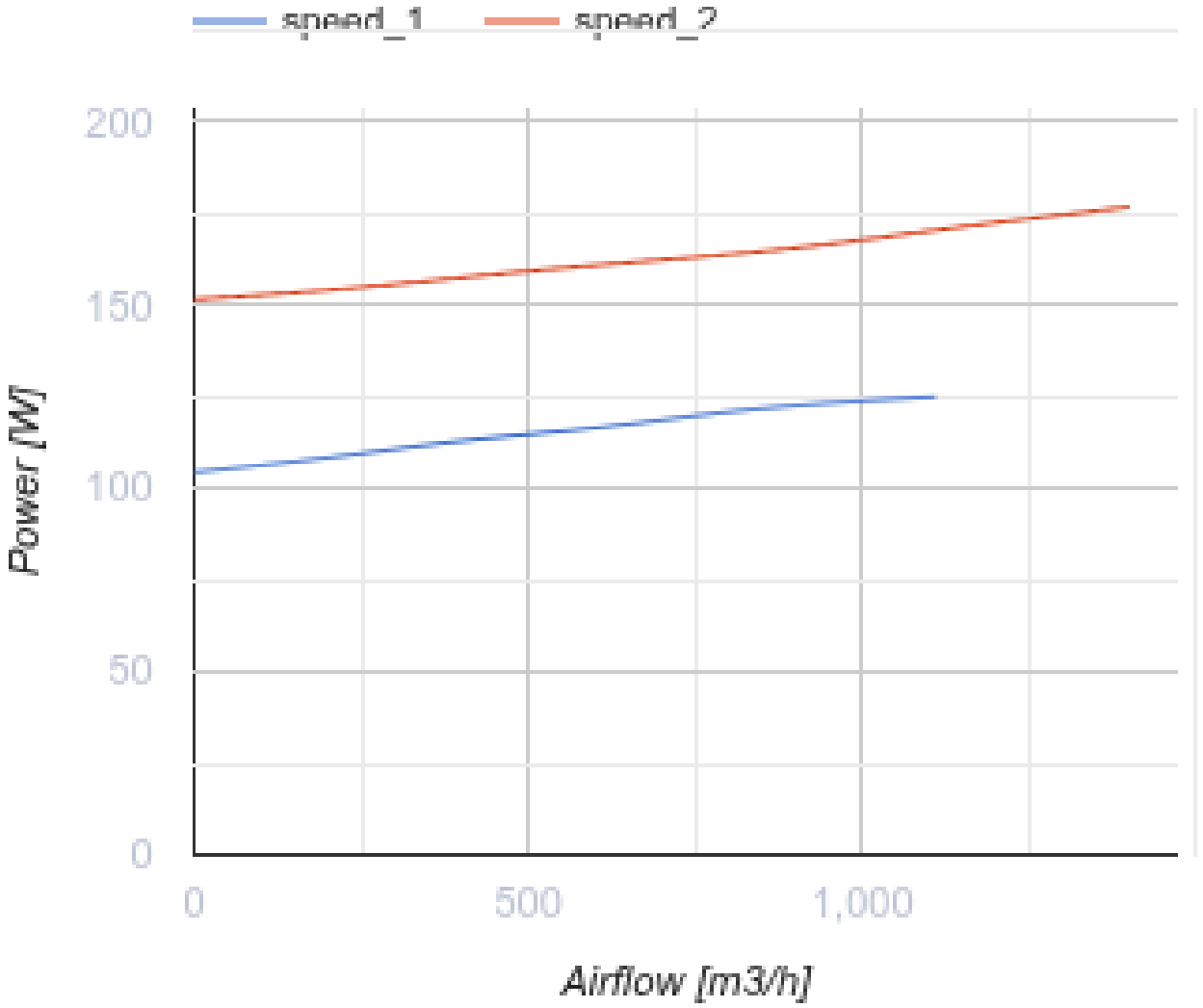

Dimensions

ØD	B	B1	H	L	L1
248	370	445	360	665	130

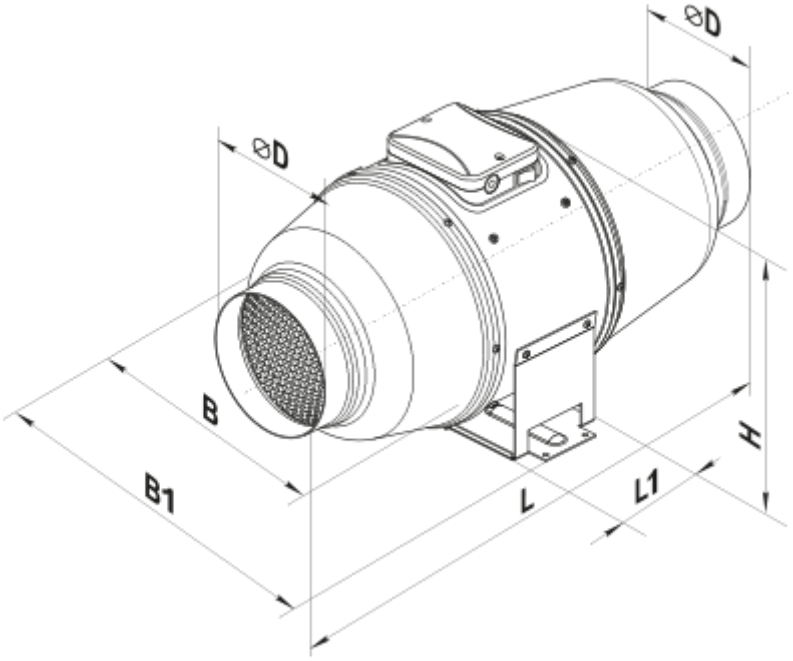

Accessories

For round ducts

Name	Photo	Description
SRF 250/600		Silencers made of aluminium alloy filled with non-combustible sound-absorbing material
SRF 250/900		Silencers made of aluminium alloy filled with non-combustible sound-absorbing material
SRF 250/2000		Silencers made of aluminium alloy filled with non-combustible sound-absorbing material
SRP 250/500		Silencers with an internal flexible air duct made of micro-perforated aluminium foil laminated with polyester film
SRP 250/600		Silencers with an internal flexible air duct made of micro-perforated aluminium foil laminated with polyester film
SRP 250/750		Silencers with an internal flexible air duct made of micro-perforated aluminium foil laminated with polyester film
SRP 250/900		Silencers with an internal flexible air duct made of micro-perforated aluminium foil laminated with polyester film
SRP 250/1200		Silencers with an internal flexible air duct made of micro-perforated aluminium foil laminated with polyester film

SRP 250/1500		Silencers with an internal flexible air duct made of micro-perforated aluminium foil laminated with polyester film
SRP 250/2000		Silencers with an internal flexible air duct made of micro-perforated aluminium foil laminated with polyester film

For round ducts

Name	Photo	Description
FB 250		Round panel air filters
FBK 250-4		Round bag air filters
FBK 250-5	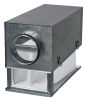	Round bag air filters
FBK 250-7	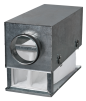	Round bag air filters

For round ducts

Name	Photo	Description
KOM 250		Backdraught damper with spring-loaded plates for shutting off air flow in round air ducts
KOMu 250		Backdraught damper with spring-loaded plates for shutting off air flow in round air ducts
KOM1 250		Backdraught gravity damper for shutting off air flow in round air ducts
KR 250		Air dampers for controlling air flow in round air ducts
KRV 250		Air dampers for automatic air flow control in round ducts

For round ducts

Name	Photo	Description

VVGF 250		Flexible anti-vibration inserts with flanges for round air ducts

Water heaters

Name	Photo	Description
NKV 250-2		Inline water supply air heaters or heater for air handling units with a round cross-section
NKV 250-4		Inline water supply air heaters or heater for air handling units with a round cross-section

Electrical heaters

Name	Photo	Description
NK 250-1,2-1		Round electric inline heaters with round cross-section
NK 250-2,0-1		Round electric inline heaters with round cross-section
NK 250-2,4-1		Round electric inline heaters with round cross-section
NK 250-3,0-1		Round electric inline heaters with round cross-section
NK 250-3,6-3		Round electric inline heaters with round cross-section
NK 250-6,0-3		Round electric inline heaters with round cross-section
NK 250-9,0-3		Round electric inline heaters with round cross-section

Ecodesign

Trademark	Vents
Model	TT Silent-M 250 TV
Type of drive installed	External MSD or VSD
Type of heat recovery system	None
Nominal external pressure (Pa)	236
Maximum external leakage rates (%)	2.7
Static efficiency (%)	30.9
Declared typology	NRVU UVU
Effective electric power input (kW)	0.174
Sound power level (dB(A))	56