# TT Silent-M 250 R1V



Mixed-flow inline fans in sound-insulated casing

- Sound pressure level LpA at 3 m: 38
- Sound-insulated casing
- Control: Built-in speed controller
- Impeller type: Mixed-flow
- Casing material: Coated steel
- Installation in any position
- Cable with mains plug

| | Unit of measurement | TT Silent-M 250 R1V | |
|---|---|---|---|
| Speed | - | 1 | 2 |
| Connected air duct size | mm | 250 | |
| Phases | - | 1 | |
| Minimum supply voltage | V | 230 | |
| Maximum supply voltage | V | 230 | |
| Power supply frequency | Hz | 50/60 | |
| Rated power | W | 125 | 177 |
| Unit current | A | 0.54 | 0.79 |
| Maximum airflow | m³/h | 1110 | 1400 |
| Rotation speed at 50hz | - | 1955 | 2440 |
| Sound pressure level LpA at 3 m | dB(A) | 34 | 38 |
| Weight | kg | 14.7 | |
| Transported air temperature (max) | °C | 60 | |
| Ingress protection rating | - | IPX4 | |
| Ingress protection rating of the drive | - | IPX4 | |
| Impeller material | - | Plastic | |

## Dimensions

| ØD | B | B1 | H | L | L1 |
|---|---|---|---|---|---|
| 248 | 370 | 445 | 360 | 665 | 130 |

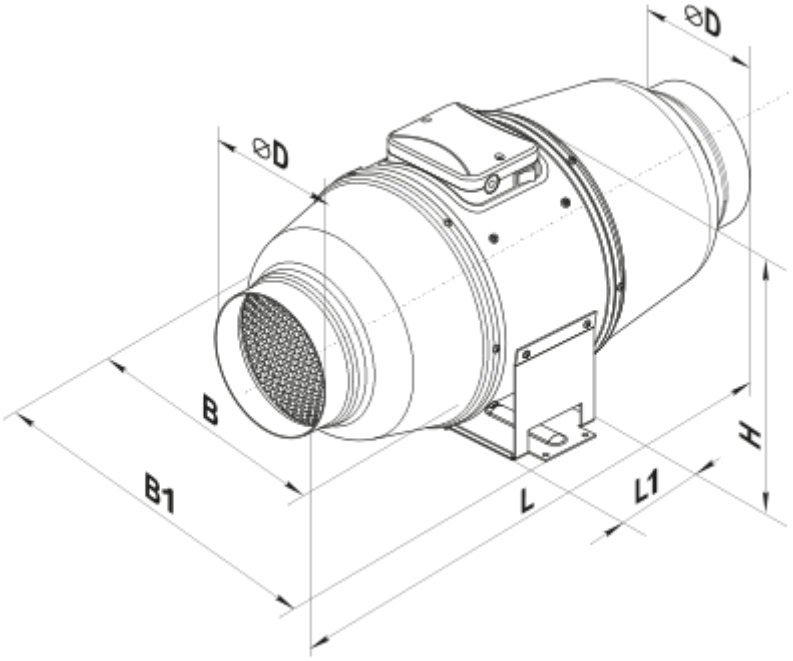


## Accessories

### For round ducts

| Name | Photo | Description |
|---|---|---|
| SRF 250/600 |  | Silencers made of aluminium alloy filled with non-combustible sound-absorbing material |
| SRF 250/900 |  | Silencers made of aluminium alloy filled with non-combustible sound-absorbing material |
| SRF 250/2000 |  | Silencers made of aluminium alloy filled with non-combustible sound-absorbing material |
| SRP 250/500 |  | Silencers with an internal flexible air duct made of micro-perforated aluminium foil laminated with polyester film |
| SRP 250/600 |  | Silencers with an internal flexible air duct made of micro-perforated aluminium foil laminated with polyester film |
| SRP 250/750 |  | Silencers with an internal flexible air duct made of micro-perforated aluminium foil laminated with polyester film |
| SRP 250/900 |  | Silencers with an internal flexible air duct made of micro-perforated aluminium foil laminated with polyester film |

| | | |
|---|---|---|
| SRP 250/1200 |  | Silencers with an internal flexible air duct made of micro-perforated aluminium foil laminated with polyester film |
| SRP 250/1500 |  | Silencers with an internal flexible air duct made of micro-perforated aluminium foil laminated with polyester film |
| SRP 250/2000 |  | Silencers with an internal flexible air duct made of micro-perforated aluminium foil laminated with polyester film |

### For round ducts

| Name | Photo | Description |
|---|---|---|
| FB 250 |  | Round panel air filters |
| FBK 250-4 | 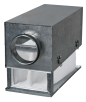 | Round bag air filters |
| FBK 250-5 | 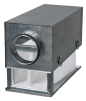 | Round bag air filters |
| FBK 250-7 |  | Round bag air filters |

### For round ducts

| Name | Photo | Description |
|---|---|---|
| KOM 250 |  | Backdraught damper with spring-loaded plates for shutting off air flow in round air ducts |
| KOMu 250 |  | Backdraught damper with spring-loaded plates for shutting off air flow in round air ducts |
| KOM1 250 |  | Backdraught gravity damper for shutting off air flow in round air ducts |
| KR 250 |  | Air dampers for controlling air flow in round air ducts |
| KRV 250 |  | Air dampers for automatic air flow control in round ducts |

### For round ducts

| Name | Photo | Description |
|---|---|---|

| | | |
|---|---|---|
| VVGF 250 |  | Flexible anti-vibration inserts with flanges for round air ducts |

### Water heaters

| Name | Photo | Description |
|---|---|---|
| NKV 250-2 |  | Inline water supply air heaters or heater for air handling units with a round cross-section |
| NKV 250-4 |  | Inline water supply air heaters or heater for air handling units with a round cross-section |

### Electrical heaters

| Name | Photo | Description |
|---|---|---|
| NK 250-1,2-1 |  | Round electric inline heaters with round cross-section |
| NK 250-2,0-1 |  | Round electric inline heaters with round cross-section |
| NK 250-2,4-1 |  | Round electric inline heaters with round cross-section |
| NK 250-3,0-1 |  | Round electric inline heaters with round cross-section |
| NK 250-3,6-3 |  | Round electric inline heaters with round cross-section |
| NK 250-6,0-3 |  | Round electric inline heaters with round cross-section |
| NK 250-9,0-3 |  | Round electric inline heaters with round cross-section |

## Ecodesign

| Trademark | Vents |
|---|---|
| Model | TT Silent-M 250 R1V |
| Type of drive installed | External MSD or VSD |
| Type of heat recovery system | None |
| Nominal external pressure (Pa) | 0 |
| Maximum external leakage rates (%) | 0 |
| Static efficiency (%) | 0 |
| Sound power level (dB(A)) | 0 |
| Effective electric power input (kW) | 0 |
| Declared typology | NRVU UVU |