TT Silent-M 160 TR1V



Mixed-flow inline fans in sound-insulated casing

- Sound pressure level LpA at 3 m: 33
- Sound-insulated casing
- Control: Built-in speed controller
- Impeller type: Mixed-flow
- Casing material: Coated steel
- Installation in any position
- Cable with mains plug
- Timer: Turn off timer

	Unit of measurement	TT Silent-M 160 TR1V	
Speed	-	1	2
Connected air duct size	mm	160	
Phases	-	1	
Maximum supply voltage	V	230	
Minimum supply voltage	V	230	
Power supply frequency	Hz	50/60	
Rated power	W	45	52
Unit current	A	0.2	0.23
Maximum airflow	m^3/h	405	555
Rotation speed at 50hz	-	1970	2645
Sound pressure level LpA at 3 m	dB(A)	26	33
Weight	kg	6.2	
Transported air temperature (max)	°C	60	
Ingress protection rating	-	IPX4	
Ingress protection rating of the drive	-	IPX4	
Impeller material	-	Plastic	

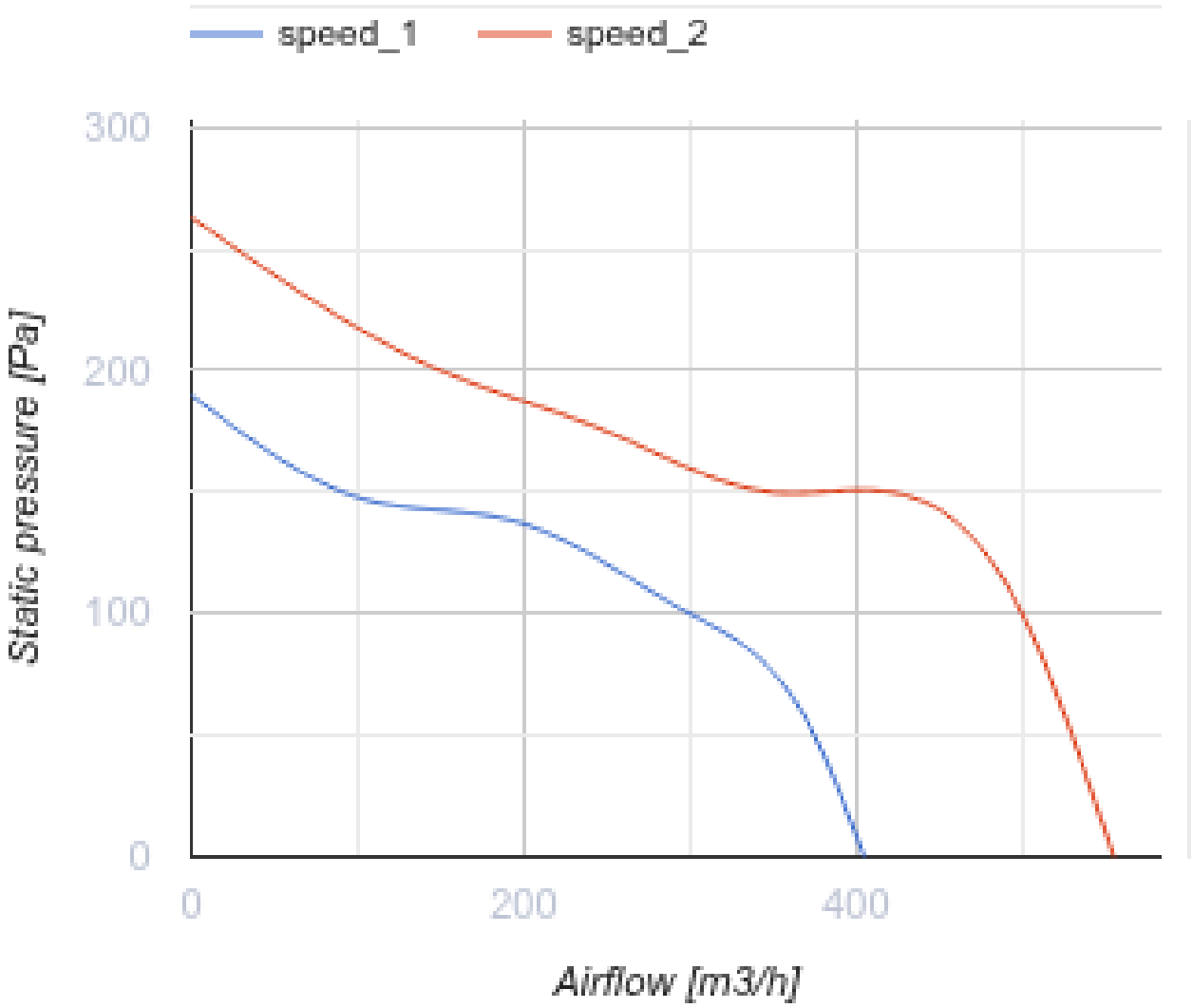
speed_1
speed_2
300
200
100
0
Static pressure [Pa]
0
200
400
Airflow [m3/h]

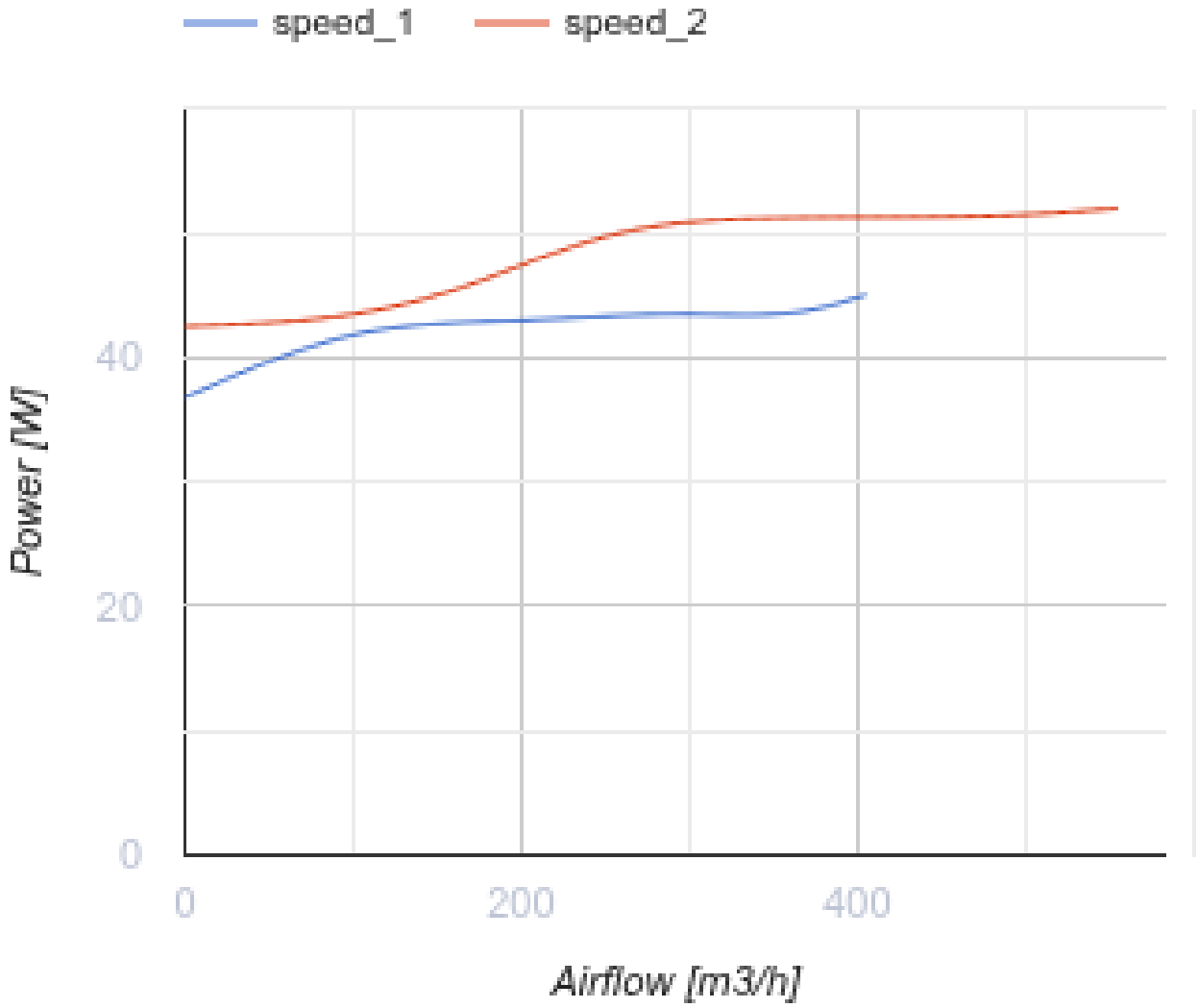

Dimensions

ØD	B	B1	H	L	L1
157	231	273	263	580	44

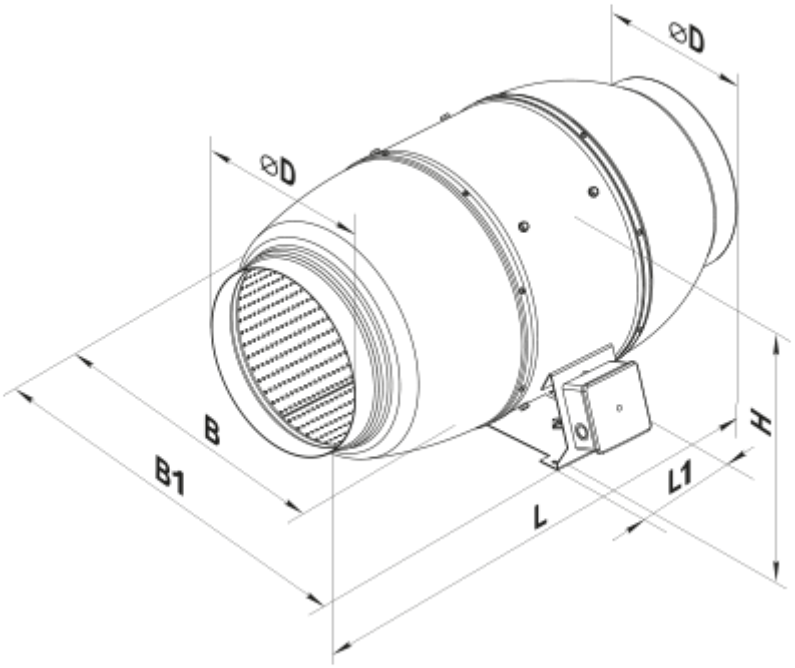
⊘D
⊘D
B
B1
L
L1
H

Ecodesign

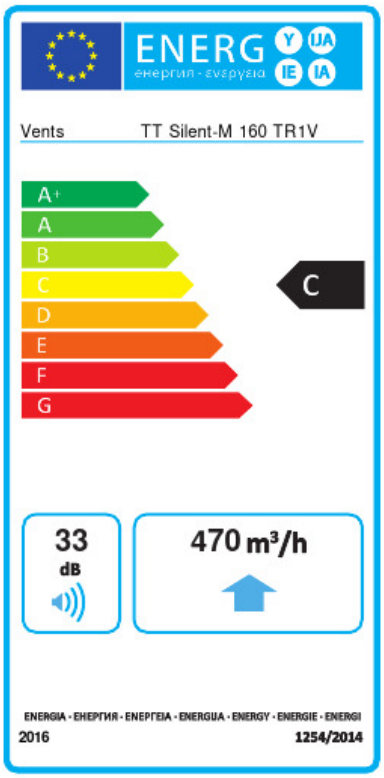

Trademark	Vents					
Model	TT Silent-M 160 TR1V					
Specific energy consumption (SEC) (kWh/(m²/a))	Cold		Average		Warm	
	-52.8	A+	-25.7	C	-10.2	E
Type of ventilation unit	Unidirectional					
Type of drive installed	Multi-speed					
Type of heat recovery system	None					
Maximum flow rate (m³/h)	470					
Electric power input (W)	52					
Reference flow rate (m³/s)	0.091					
Reference pressure difference (Pa)	50					
Specific power input (SPI) (W/(m³/h))	0.137					
Control typology	Local demand control					
Maximum external leakage rates (%)	2.7					
Sound power level (dB(A))	33					
Declared typology	RVU UVU					
The annual electricity consumption (AEC) (kWh/a)	Cold		Average		Warm	
	102		102		102	
The annual heating saved (AHS) (kWh/a)	Cold		Average		Warm	
	5536		2830		1280	