TT Silent-M 125 TR1V



Mixed-flow inline fans in sound-insulated casing

- Sound pressure level LpA at 3 m: 25
- Sound-insulated casing
- Control: Built-in speed controller
- Impeller type: Mixed-flow
- Casing material: Coated steel
- Installation in any position
- Cable with mains plug
- Timer: Turn off timer

	Unit of measurement	TT Silent-M 125 TR1V		
Speed	-	1	2	3
Connected air duct size	mm	125		
Phases	-	1		
Minimum supply voltage	V	230		
Maximum supply voltage	V	230		
Power supply frequency	Hz	50/60		
Rated power	W	9	12	23
Unit current	A	0.08	0.09	0.10
Maximum airflow	m^3/h	155	214	340
Rotation speed at 50hz	-	1784	2473	2788
Sound pressure level LpA at 3 m	dB(A)	16	21	25
Weight	kg	4.6		
Transported air temperature (max)	°C	60		
Ingress protection rating	-	IPX4		
Ingress protection rating of the drive	-	IPX4		
Impeller material	-	Plastic		

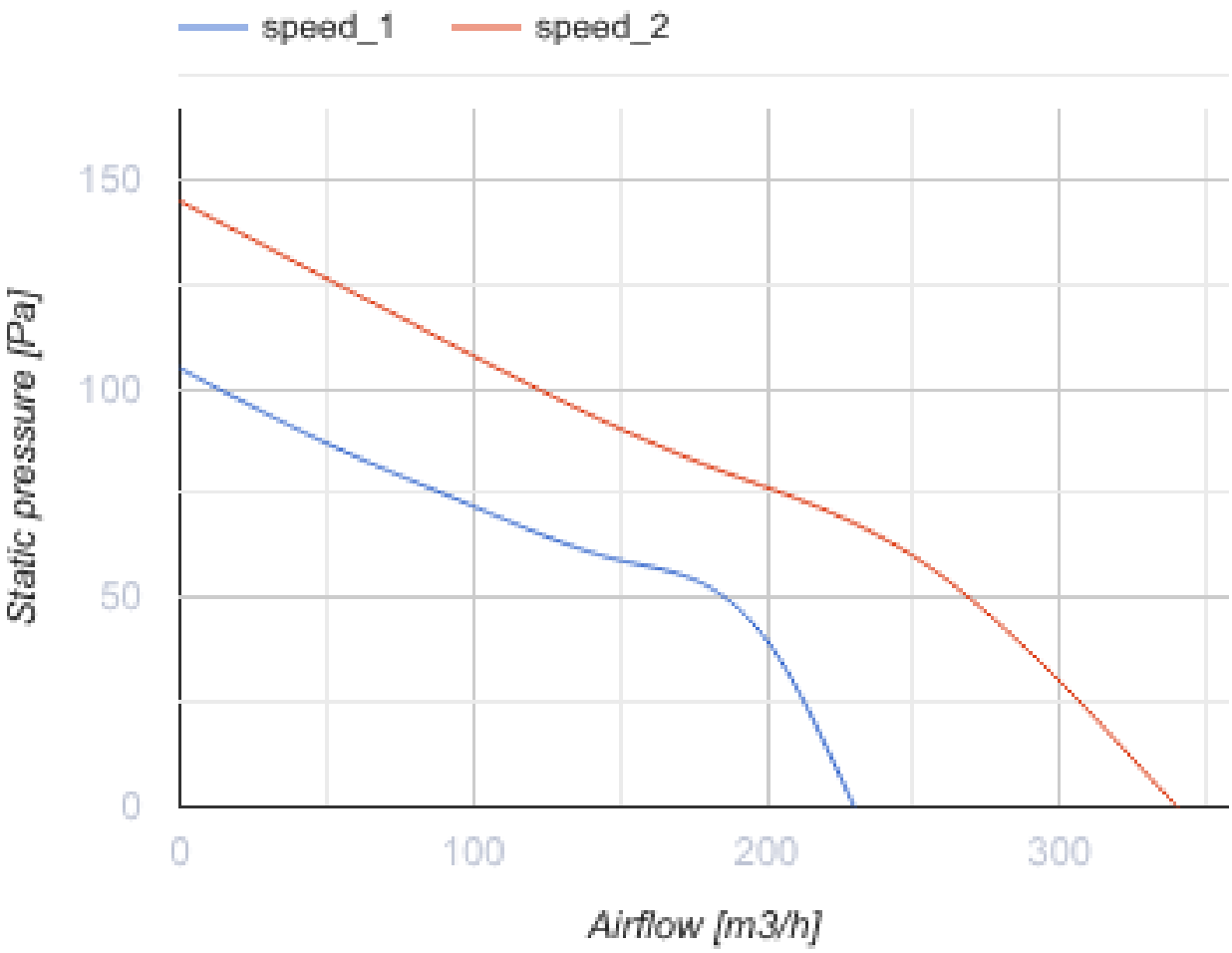
speed_1
speed_2
150
100
50
0
Static pressure [Pa]
0
100
200
300
Airflow [m3/h]

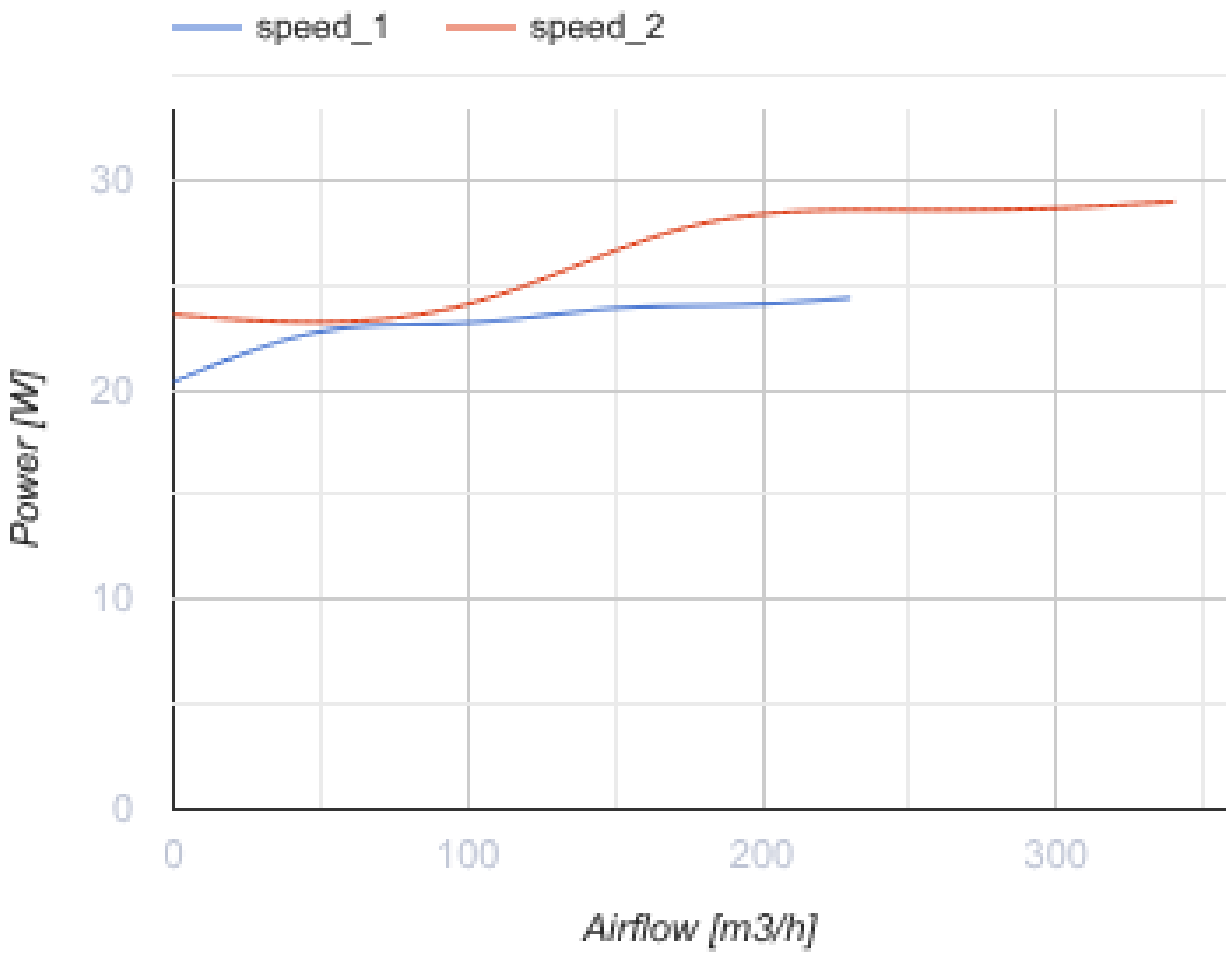

Dimensions

ØD	B	B1	H	L	L1
123	231	243	220	474	42

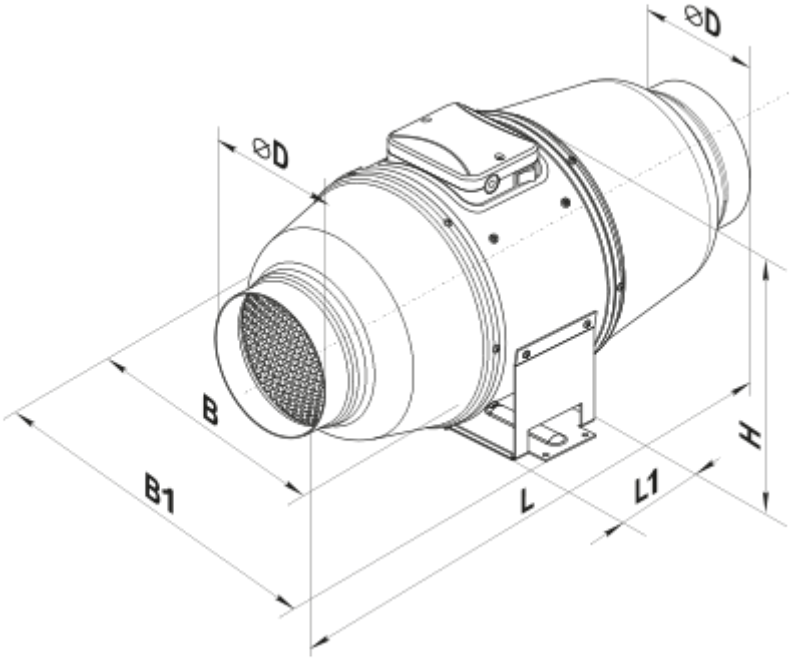
⌀D
⌀D
B
B1
L
L1
H

Ecodesign

Trademark	Vents					
Model	TT Silent-M 125 TR1V					
Specific energy consumption (SEC) (kWh/(m²/a))	Cold		Average		Warm	
	-54.1	A+	-27	B	-11.5	E
Type of ventilation unit	Unidirectional					
Type of drive installed	Multi-speed					
Type of heat recovery system	None					
Maximum flow rate (m³/h)	145					
Electric power input (W)	22					
Reference flow rate (m³/s)	0.035					
Nominal flow rate (m³/s)	0.035					
Reference pressure difference (Pa)	50					
Specific power input (SPI) (W/(m³/h))	0.286					
Control typology	Local demand control					
Maximum external leakage rates (%)	2.7					
Declared typology	RVU UVU					
Sound power level (dB(A))	45					
The annual electricity consumption (AEC) (kWh/a)	Cold		Average		Warm	
	51		51		51	
The annual heating saved (AHS) (kWh/a)	Cold		Average		Warm	
	5536		2830		1280	