# TT 100 U1

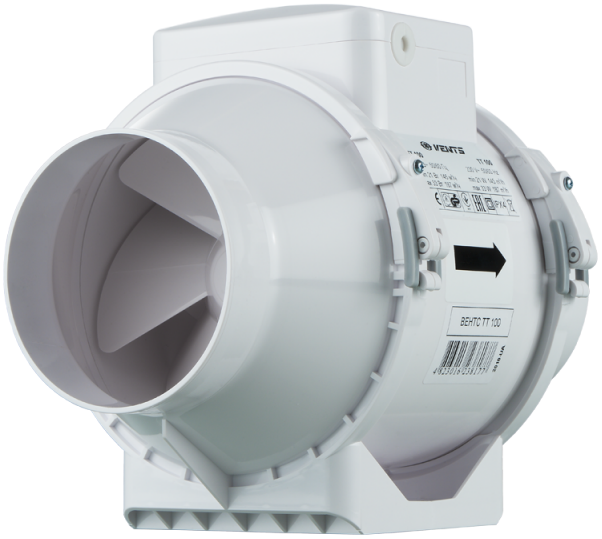

Mixed-flow inline fans

- Sound pressure level LpA at 3 m: 36
- Control: Built-in speed controller
- Impeller type: Mixed-flow
- Casing material: Plastic
- Installation in any position
- Cable with mains plug
- Temperature sensor
- Timer: Turn off timer

| | Unit of measurement | TT 100 U1 | |
|---|---|---|---|
| Speed | - | 1 | 2 |
| Connected air duct size | mm | 100 | |
| Phases | - | 1 | |
| Minimum supply voltage | V | 230 | |
| Maximum supply voltage | V | 230 | |
| Power supply frequency | Hz | 50/60 | |
| Rated power | W | 21 | 33 |
| Unit current | A | 0.11 | 0.21 |
| Maximum airflow | m³/h | 145 | 187 |
| Rotation speed at 50hz | - | 2180 | 2385 |
| Sound pressure level LpA at 3 m | dB(A) | 27 | 36 |
| Weight | kg | 1.45 | |
| Transported air temperature (max) | °C | 40 | |
| Transported air temperature (min) | °C | -25 | |
| Ingress protection rating | - | IPX4 | |
| Ingress protection rating of the drive | - | IPX4 | |
| Impeller material | - | Plastic | |

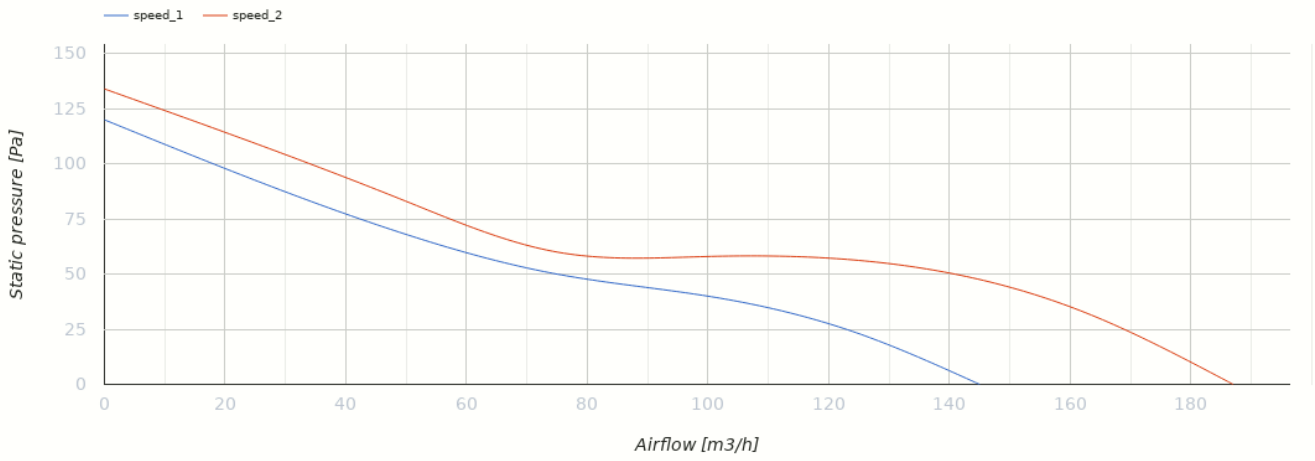


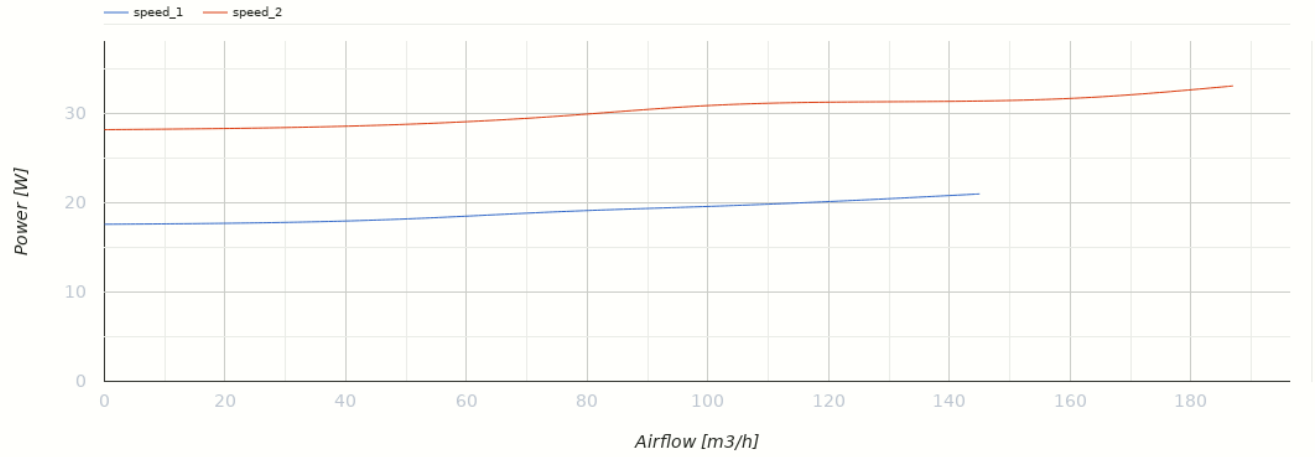


## Dimensions

| ØD | B | H | L |
|---|---|---|---|
| 96 | 167 | 190 | 246 |

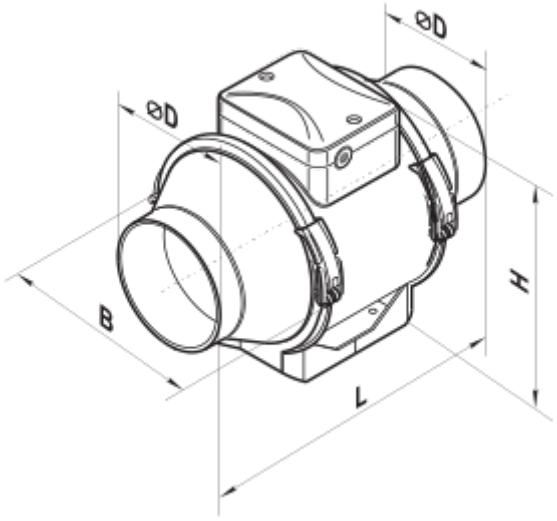

## Accessories

### For round ducts

| Name | Photo | Description |
|---|---|---|
| SR 100/600 |  | Silencers made of galvanized steel filled with non-combustible sound-absorbing material |
| SR 100/900 |  | Silencers made of galvanized steel filled with non-combustible sound-absorbing material |
| SR 100/1200 |  | Silencers made of galvanized steel filled with non-combustible sound-absorbing material |
| SRF 100/600 |  | Silencers made of aluminium alloy filled with non-combustible sound-absorbing material |
| SRF 100/900 |  | Silencers made of aluminium alloy filled with non-combustible sound-absorbing material |
| SRF 100/2000 |  | Silencers made of aluminium alloy filled with non-combustible sound-absorbing material |
| SRP 100/500 |  | Silencers with an internal flexible air duct made of micro-perforated aluminium foil laminated with polyester film |
| SRP 100/600 |  | Silencers with an internal flexible air duct made of micro-perforated aluminium foil laminated with polyester film |
| SRP 100/750 |  | Silencers with an internal flexible air duct made of micro-perforated aluminium foil laminated with polyester film |
| SRP 100/900 |  | Silencers with an internal flexible air duct made of micro-perforated aluminium foil laminated with polyester film |
| SRP 100/1200 |  | Silencers with an internal flexible air duct made of micro-perforated aluminium foil laminated with polyester film |
| SRP 100/1500 |  | Silencers with an internal flexible air duct made of micro-perforated aluminium foil laminated with polyester film |
| SRP 100/2000 |  | Silencers with an internal flexible air duct made of micro-perforated aluminium foil laminated with polyester film |

### For round ducts

| Name | Photo | Description |
|---|---|---|
| FB K2 100 G4/F8 |  | Panel filters of a high purification level |
| FB K2 100 G4/C/F8 |  | Panel filters of a high purification level |
| FB K2 100 G4/H13 |  | Panel filters of a high purification level |
| FB K2 100 G4/C/H13 |  | Panel filters of a high purification level |
| FB K2 100 ES |  | Panel electrostatic filters of a high purification level |
| FB 100 |  | Round panel air filters |
| FBV 100 |  | Round panel air filters with a large filtration area |
| FBK 100-4 |  | Round bag air filters |
| FBK 100-5 |  | Round bag air filters |
| FBK 100-7 |  | Round bag air filters |

### For round ducts

| Name | Photo | Description |
|---|---|---|
| KOM 100 |  | Backdraught damper with spring-loaded plates for shutting off air flow in round air ducts |
| KOMu 100 |  | Backdraught damper with spring-loaded plates for shutting off air flow in round air ducts |
| KOM1 100 |  | Backdraught gravity damper for shutting off air flow in round air ducts |
| KR 100 |  | Air dampers for controlling air flow in round air ducts |

| | | |
|---|---|---|
| KRV 100 |  | Air dampers for automatic air flow control in round ducts |

### For round ducts

| Name | Photo | Description |
|---|---|---|
| VVG 100 | 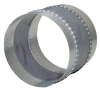 | Flexible anti-vibration inserts for round ducts |

### Water heaters

| Name | Photo | Description |
|---|---|---|
| NKV 100-2 |  | Inline water supply air heaters or heater for air handling units with a round cross-section |
| NKV 100-4 |  | Inline water supply air heaters or heater for air handling units with a round cross-section |

### Electrical heaters

| Name | Photo | Description |
|---|---|---|
| NK 100-0,6-1 |  | Round electric inline heaters with round cross-section |
| NK 100-0,8-1 |  | Round electric inline heaters with round cross-section |
| NK 100-1,2-1 |  | Round electric inline heaters with round cross-section |
| NK 100-1,6-1 |  | Round electric inline heaters with round cross-section |
| NK 100-1,8-1 |  | Round electric inline heaters with round cross-section |

## Ecodesign

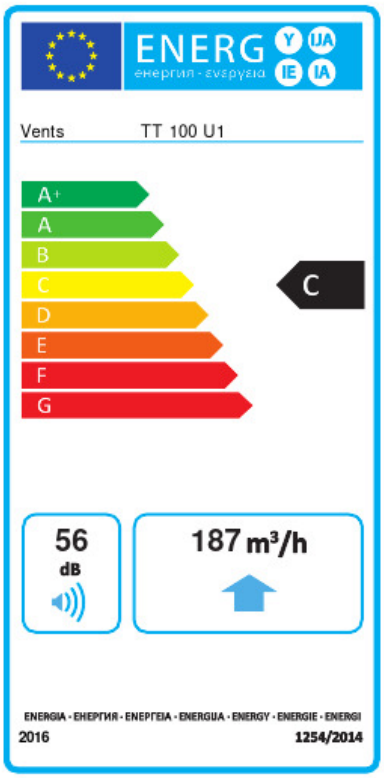


| Trademark | Vents | | | | | |
|---|---|---|---|---|---|---|
| Model | TT 100 U1 | | | | | |
| Specific energy consumption (SEC) (kWh/(m²/a)) | Cold | | Average | | Warm | |
| | -49.5 | A+ | -24.4 | C | -10.1 | E |
| Type of ventilation unit | Unidirectional | | | | | |
| Type of drive installed | Variable speed | | | | | |
| Type of heat recovery system | None | | | | | |
| Maximum flow rate (m³/h) | 187 | | | | | |
| Electric power input (W) | 33 | | | | | |
| Reference flow rate (m³/s) | 0.036 | | | | | |
| Specific power input (SPI) (W/(m³/h)) | 0.123 | | | | | |
| Control typology | Local demand control | | | | | |
| Maximum external leakage rates (%) | 2.7 | | | | | |
| Declared typology | RVU UVU | | | | | |
| Sound power level (dB(A)) | 56 | | | | | |
| The annual electricity consumption (AEC) (kWh/a) | Cold | | Average | | Warm | |
| | 72 | | 72 | | 72 | |
| The annual heating saved (AHS) (kWh/a) | Cold | | Average | | Warm | |
| | 5131 | | 2623 | | 1186 | |