TT 100 TV

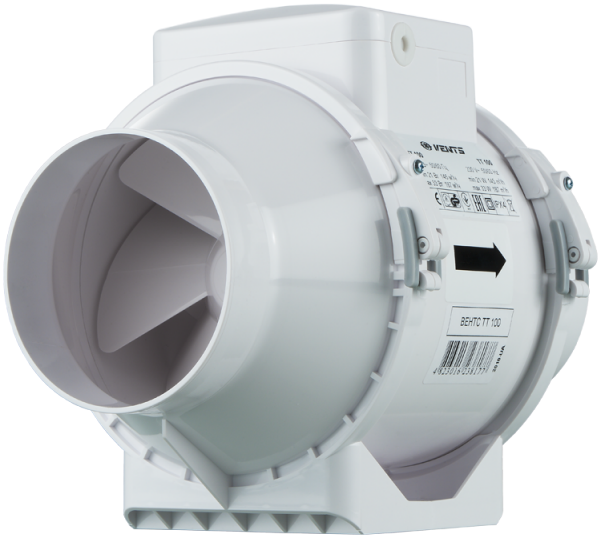

Mixed-flow inline fans

- Sound pressure level LpA at 3 m: 36
- Control: Built-in speed controller
- Impeller type: Mixed-flow
- Casing material: Plastic
- Installation in any position
- Timer: Turn off timer

	Unit of measurement	TT 100 TV	
Speed	-	1	2
Connected air duct size	mm	100	
Phases	-	1	
Maximum supply voltage	V	230	
Minimum supply voltage	V	230	
Power supply frequency	Hz	50/60	
Rated power	W	21	33
Unit current	A	0.11	0.21
Maximum airflow	m³/h	145	187
Rotation speed at 50hz	-	2180	2385
Sound pressure level LpA at 3 m	dB(A)	27	36
Weight	kg	1.45	
Transported air temperature (max)	°C	40	
Transported air temperature (min)	°C	-25	
Ingress protection rating	-	IPX4	
Ingress protection rating of the drive	-	IPX4	
Impeller material	-	Plastic	

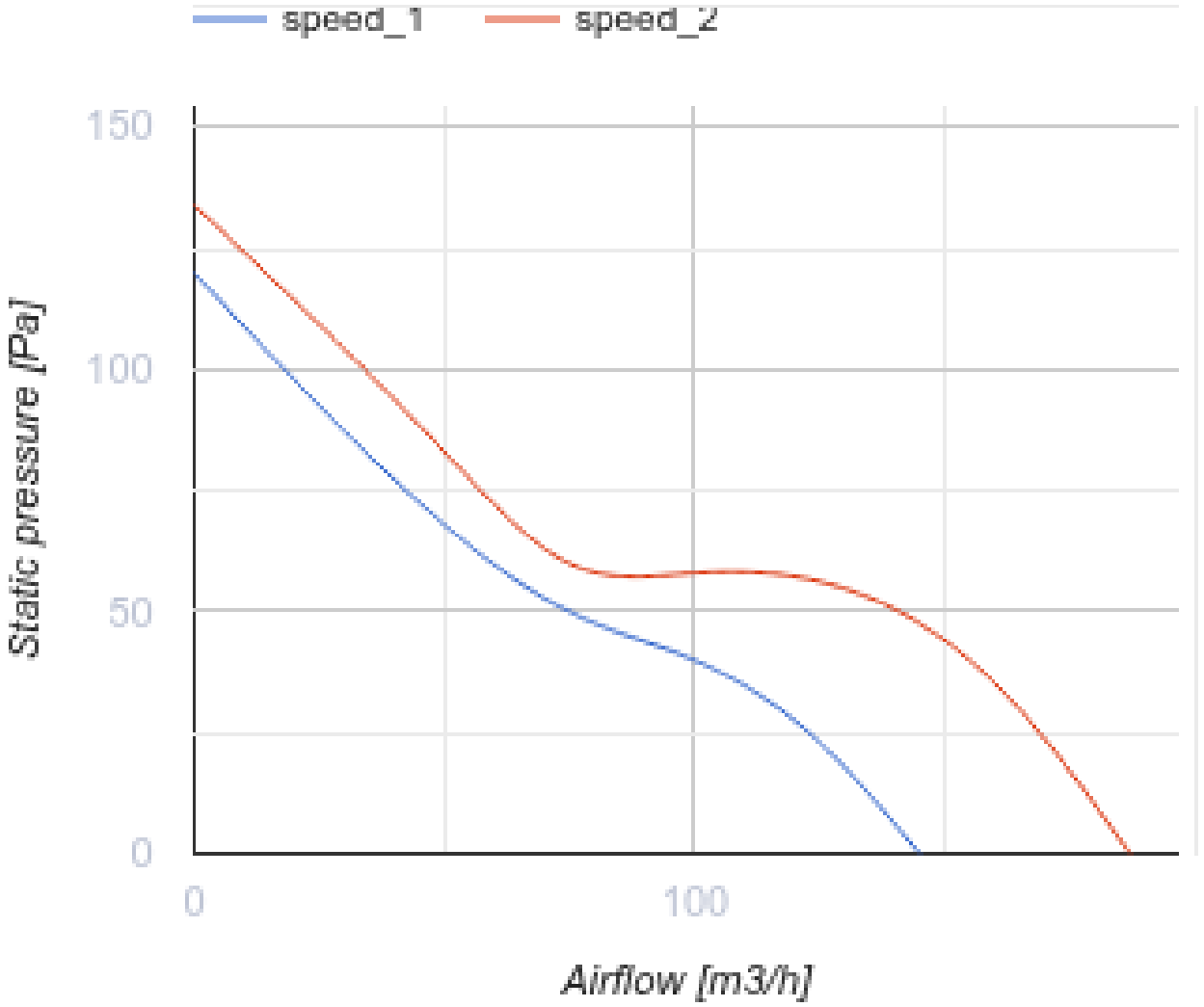
speed_1
speed_2
150
100
50
0
0
100
Static pressure [Pa]
Airflow [m3/h]

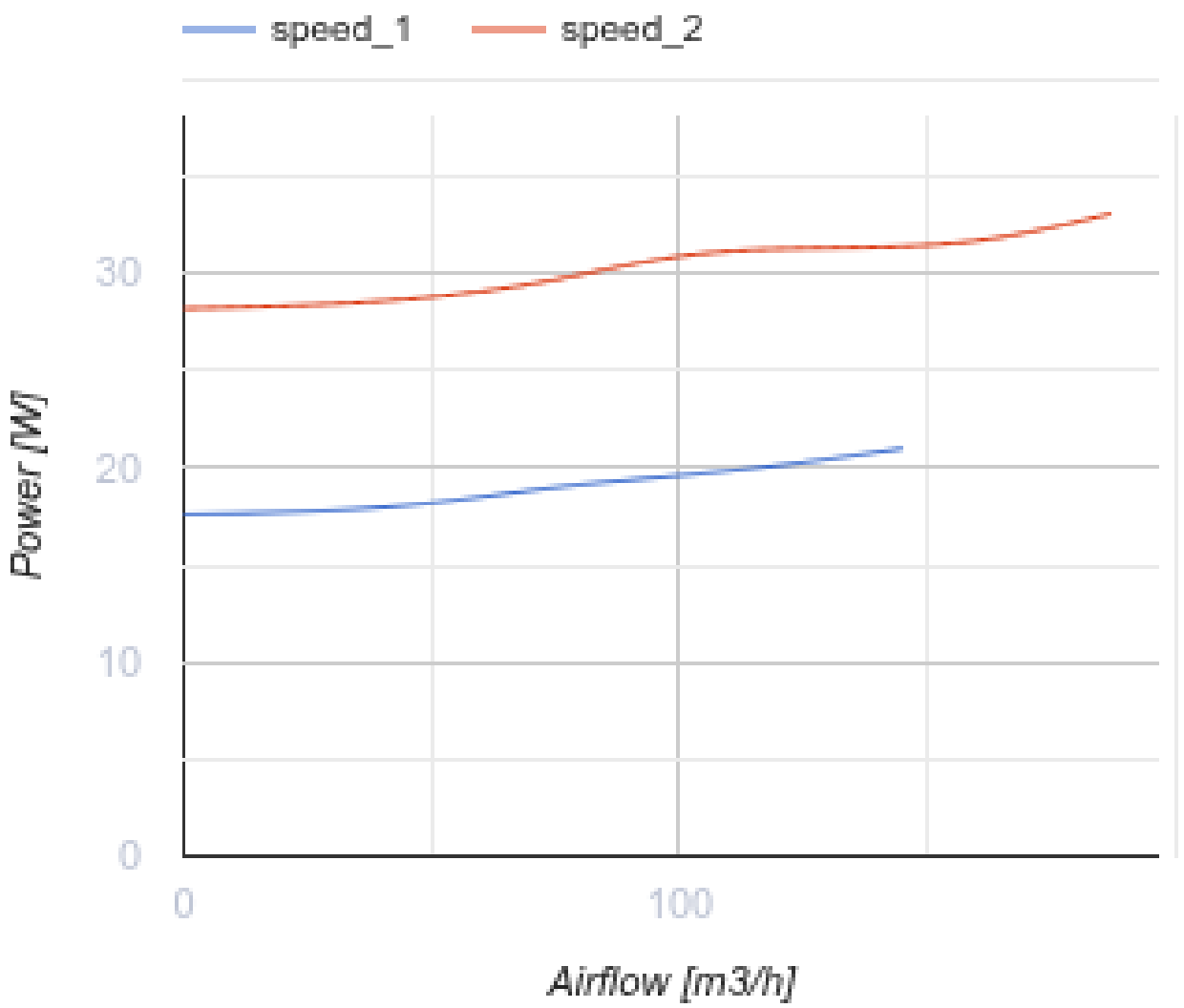

Dimensions

ØD	B	H	L
96	167	190	246

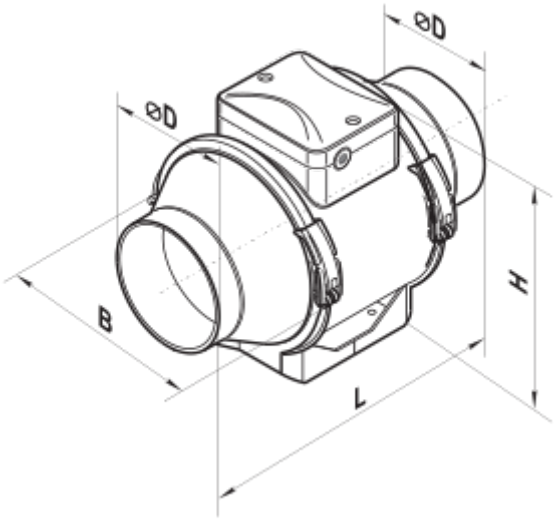

Accessories

For round ducts

Name	Photo	Description
SR 100/600		Silencers made of galvanized steel filled with non-combustible sound-absorbing material
SR 100/900		Silencers made of galvanized steel filled with non-combustible sound-absorbing material
SR 100/1200		Silencers made of galvanized steel filled with non-combustible sound-absorbing material
SRF 100/600		Silencers made of aluminium alloy filled with non-combustible sound-absorbing material
SRF 100/900		Silencers made of aluminium alloy filled with non-combustible sound-absorbing material
SRF 100/2000		Silencers made of aluminium alloy filled with non-combustible sound-absorbing material
SRP 100/500		Silencers with an internal flexible air duct made of micro-perforated aluminium foil laminated with polyester film
SRP 100/600		Silencers with an internal flexible air duct made of micro-perforated aluminium foil laminated with polyester film
SRP 100/750		Silencers with an internal flexible air duct made of micro-perforated aluminium foil laminated with polyester film

SRP 100/900		Silencers with an internal flexible air duct made of micro-perforated aluminium foil laminated with polyester film
SRP 100/1200		Silencers with an internal flexible air duct made of micro-perforated aluminium foil laminated with polyester film
SRP 100/1500		Silencers with an internal flexible air duct made of micro-perforated aluminium foil laminated with polyester film
SRP 100/2000		Silencers with an internal flexible air duct made of micro-perforated aluminium foil laminated with polyester film

For round ducts

Name	Photo	Description
FB K2 100 G4/F8		Panel filters of a high purification level
FB K2 100 G4/C/F8		Panel filters of a high purification level
FB K2 100 G4/H13		Panel filters of a high purification level
FB K2 100 G4/C/H13		Panel filters of a high purification level
FB K2 100 ES		Panel electrostatic filters of a high purification level
FB 100		Round panel air filters
FBV 100		Round panel air filters with a large filtration area
FBK 100-4		Round bag air filters
FBK 100-5		Round bag air filters
FBK 100-7		Round bag air filters

For round ducts

Name	Photo	Description
KOM 100		Backdraught damper with spring-loaded plates for shutting off air flow in round air ducts
KOMu 100		Backdraught damper with spring-loaded plates for shutting off air flow in round air ducts
KOM1 100		Backdraught gravity damper for shutting off air flow in round air ducts
KR 100		Air dampers for controlling air flow in round air ducts
KRV 100		Air dampers for automatic air flow control in round ducts

For round ducts

Name	Photo	Description
VVG 100	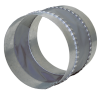	Flexible anti-vibration inserts for round ducts

Water heaters

Name	Photo	Description
NKV 100-2		Inline water supply air heaters or heater for air handling units with a round cross-section
NKV 100-4		Inline water supply air heaters or heater for air handling units with a round cross-section

Electrical heaters

Name	Photo	Description
NK 100-0,6-1		Round electric inline heaters with round cross-section
NK 100-0,8-1		Round electric inline heaters with round cross-section
NK 100-1,2-1		Round electric inline heaters with round cross-section

NK 100-1,6-1		Round electric inline heaters with round cross-section
NK 100-1,8-1		Round electric inline heaters with round cross-section

Ecodesign

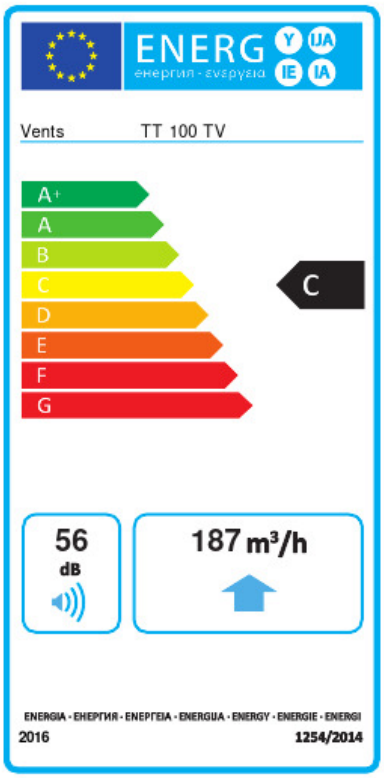

Trademark	Vents					
Model	TT 100 TV					
Specific energy consumption (SEC) (kWh/(m²/a))	Cold		Average		Warm	
	-49.5	A+	-24.4	C	-10.1	E
Type of ventilation unit	Unidirectional					
Type of drive installed	Variable speed					
Type of heat recovery system	None					
Maximum flow rate (m³/h)	187					
Electric power input (W)	33					
Reference flow rate (m³/s)	0.036					
Specific power input (SPI) (W/(m³/h))	0.123					
Control typology	Local demand control					
Maximum external leakage rates (%)	2.7					
Declared typology	RVU UVU					
Sound power level (dB(A))	56					
The annual electricity consumption (AEC) (kWh/a)	Cold		Average		Warm	
	72		72		72	
The annual heating saved (AHS) (kWh/a)	Cold		Average		Warm	
	5131		2623		1186	