Stream 100/125 EC R

Mixed-flow inline fans in sound-insulated casings with EC-motors

- Sound pressure level LpA at 3 m: 29
- Sound-insulated casing
- Impeller type: Mixed-flow
- Casing material: Polypropylene
- Cable with mains plug



	Unit of measurement	Stream 100/125 EC R	
Connected air duct size	mm	125/100	
Phases	-	1	
Minimum supply voltage	V	230	
Maximum supply voltage	V	230	
Power supply frequency	Hz	50	
Rated power	W	17	
Unit current	A	0.16	
Maximum airflow	m³/h	245	350
Rotation speed at 50hz	-	2885	2887
Sound pressure level LpA at 3 m	dB(A)	29	28
Weight	kg	3.6	
Transported air temperature (max)	°C	55	
Transported air temperature (min)	°C	-25	
Ambient air temperature min	°C	1	
Ambient air temperature max	°C	40	
Ingress protection rating	-	IPX4	
Ingress protection rating of the drive	-	IP44	
Impeller material	-	Plastic	

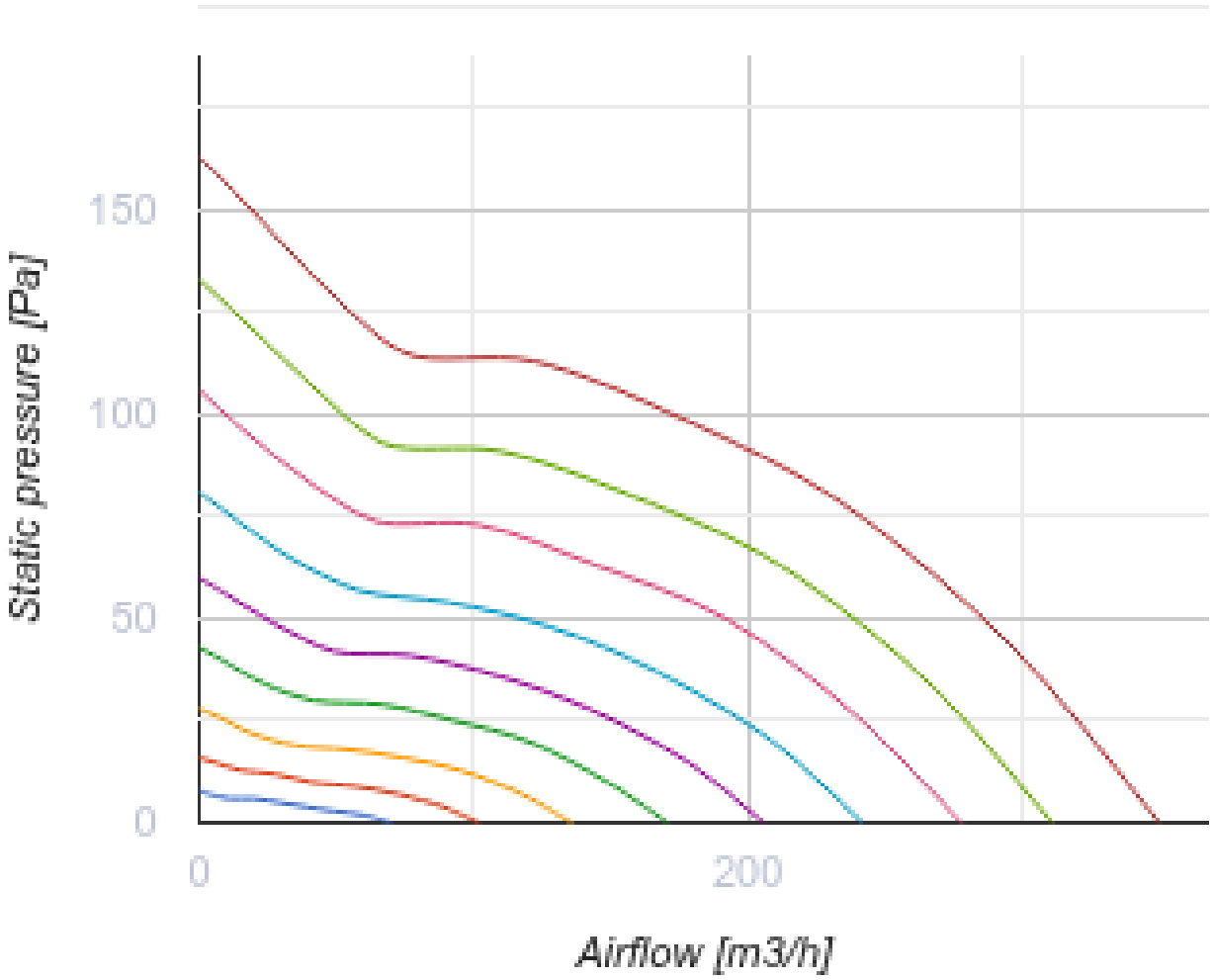
Static pressure [Pa]
150
100
50
0
0
200
Airflow [m3/h]

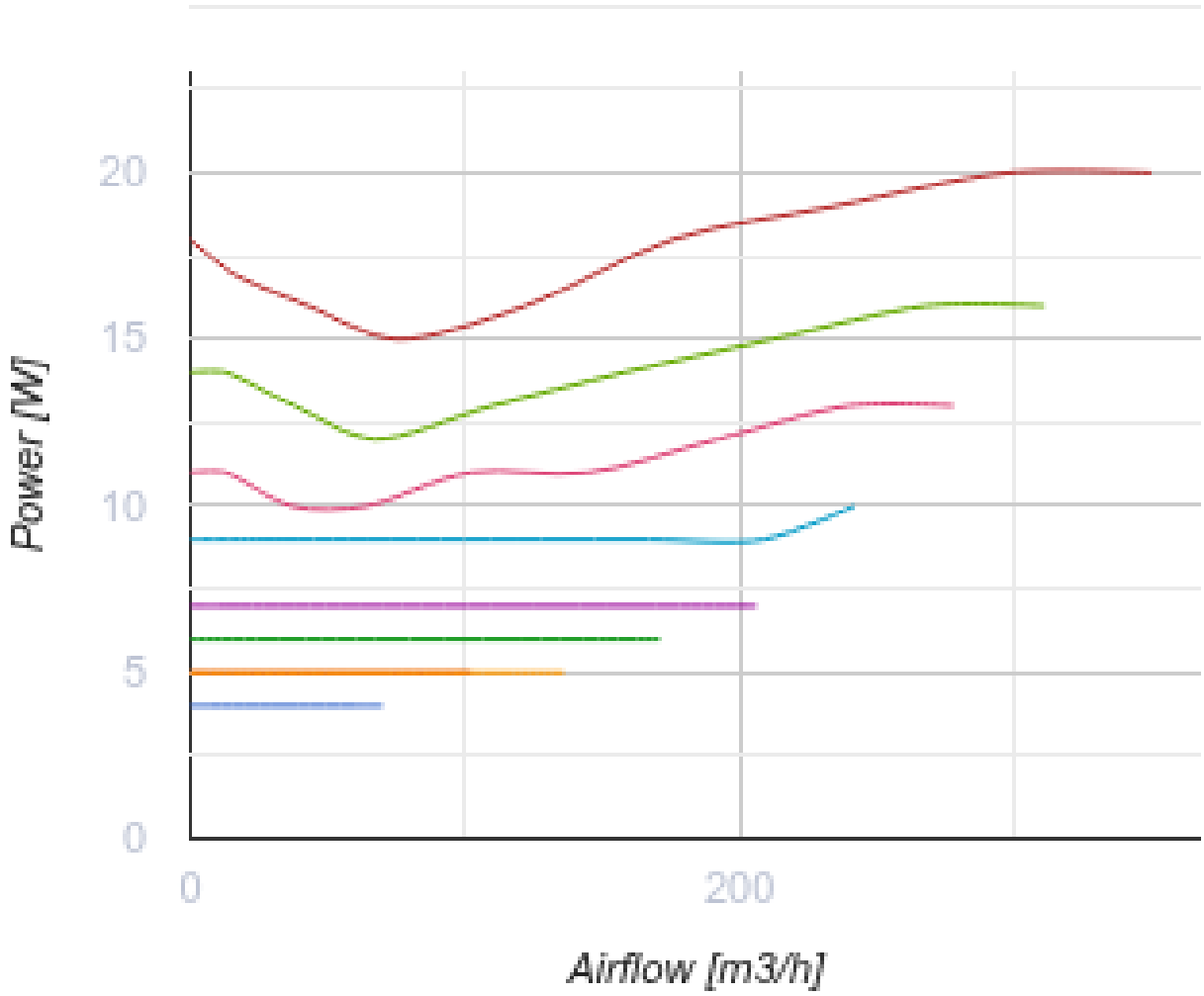

Dimensions

Ø D	B	L	H
125	207	502	224

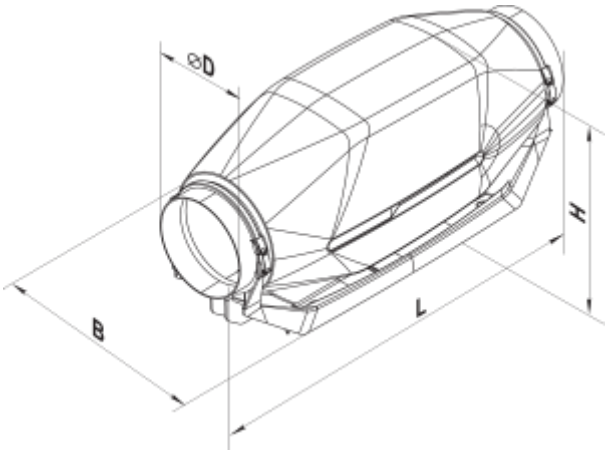

Accessories

For round ducts

Name	Photo	Description
SR 100/600		Silencers made of galvanized steel filled with non-combustible sound-absorbing material
SR 100/900		Silencers made of galvanized steel filled with non-combustible sound-absorbing material
SR 100/1200		Silencers made of galvanized steel filled with non-combustible sound-absorbing material
SR 125/600		Silencers made of galvanized steel filled with non-combustible sound-absorbing material
SR 125/900		Silencers made of galvanized steel filled with non-combustible sound-absorbing material
SR 125/1200		Silencers made of galvanized steel filled with non-combustible sound-absorbing material
SRF 100/600		Silencers made of aluminium alloy filled with non-combustible sound-absorbing material
SRF 100/900		Silencers made of aluminium alloy filled with non-combustible sound-absorbing material
SRP 100/500		Silencers with an internal flexible air duct made of micro-perforated aluminium foil laminated with polyester film
SRP 100/600		Silencers with an internal flexible air duct made of micro-perforated aluminium foil laminated with polyester film

SRP 100/750		Silencers with an internal flexible air duct made of micro-perforated aluminium foil laminated with polyester film
SRP 100/900		Silencers with an internal flexible air duct made of micro-perforated aluminium foil laminated with polyester film
SRP 100/1200		Silencers with an internal flexible air duct made of micro-perforated aluminium foil laminated with polyester film
SRP 100/1500		Silencers with an internal flexible air duct made of micro-perforated aluminium foil laminated with polyester film
SRP 100/2000		Silencers with an internal flexible air duct made of micro-perforated aluminium foil laminated with polyester film
SRP 125/500		Silencers with an internal flexible air duct made of micro-perforated aluminium foil laminated with polyester film
SRP 125/600		Silencers with an internal flexible air duct made of micro-perforated aluminium foil laminated with polyester film
SRP 125/750		Silencers with an internal flexible air duct made of micro-perforated aluminium foil laminated with polyester film
SRP 125/900		Silencers with an internal flexible air duct made of micro-perforated aluminium foil laminated with polyester film
SRP 125/1200		Silencers with an internal flexible air duct made of micro-perforated aluminium foil laminated with polyester film
SRP 125/1500		Silencers with an internal flexible air duct made of micro-perforated aluminium foil laminated with polyester film
SRP 125/2000		Silencers with an internal flexible air duct made of micro-perforated aluminium foil laminated with polyester film

For round ducts

Name	Photo	Description
FB K2 100 G4/F8		Panel filters of a high purification level
FB K2 100 G4/C/F8		Panel filters of a high purification level

FB K2 100 G4/H13		Panel filters of a high purification level
FB K2 100 G4/C/H13		Panel filters of a high purification level
FB K2 125 G4/F8		Panel filters of a high purification level
FB K2 125 G4/C/F8		Panel filters of a high purification level
FB K2 125 G4/H13		Panel filters of a high purification level
FB K2 125 G4/C/H13		Panel filters of a high purification level
FB K2 100 ES		Panel electrostatic filters of a high purification level
FB 100		Round panel air filters
FB 125		Round panel air filters
FBV 100		Round panel air filters with a large filtration area
FBV 125		Round panel air filters with a large filtration area
FBK 100-4		Round bag air filters
FBK 100-5		Round bag air filters
FBK 100-7		Round bag air filters
FBK 125-4		Round bag air filters

FBK 125-5		Round bag air filters
FBK 125-7		Round bag air filters

For round ducts

Name	Photo	Description
KOM 100		Backdraught damper with spring-loaded plates for shutting off air flow in round air ducts
KOM 125		Backdraught damper with spring-loaded plates for shutting off air flow in round air ducts
KOMu 100		Backdraught damper with spring-loaded plates for shutting off air flow in round air ducts
KOMu 125		Backdraught damper with spring-loaded plates for shutting off air flow in round air ducts
KOM1 100		Backdraught gravity damper for shutting off air flow in round air ducts
KOM1 125		Backdraught gravity damper for shutting off air flow in round air ducts
KR 100		Air dampers for controlling air flow in round air ducts
KR 125		Air dampers for controlling air flow in round air ducts
KRV 100		Air dampers for automatic air flow control in round ducts
KRV 125		Air dampers for automatic air flow control in round ducts

For round ducts

Name	Photo	Description
VVG 100	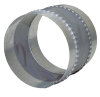	Flexible anti-vibration inserts for round ducts

VVG 125	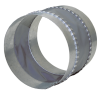	Flexible anti-vibration inserts for round ducts

Water heaters

Name	Photo	Description
NKV 100-2		Inline water supply air heaters or heater for air handling units with a round cross-section
NKV 100-4		Inline water supply air heaters or heater for air handling units with a round cross-section
NKV 125-2		Inline water supply air heaters or heater for air handling units with a round cross-section
NKV 125-4		Inline water supply air heaters or heater for air handling units with a round cross-section

Electrical heaters

Name	Photo	Description
NK 100-0,6-1		Round electric inline heaters with round cross-section
NK 100-0,8-1		Round electric inline heaters with round cross-section
NK 100-1,2-1		Round electric inline heaters with round cross-section
NK 100-1,6-1		Round electric inline heaters with round cross-section
NK 100-1,8-1		Round electric inline heaters with round cross-section
NK 125-0,6-1		Round electric inline heaters with round cross-section
NK 125-0,8-1		Round electric inline heaters with round cross-section
NK 125-1,2-1		Round electric inline heaters with round cross-section

NK 125-1,6-1		Round electric inline heaters with round cross-section
NK 125-2,4-1		Round electric inline heaters with round cross-section

Speed controllers

Name	Photo	Description
R-1/010		Speed controller for EC motors

Ecodesign

Trademark	Vents					
Model	Stream 100/125 EC R					
Specific energy consumption (SEC) (kWh/(m²/a))	Cold		Average		Warm	
	-54.4	A+	-27.4	B	-11.9	E
Type of ventilation unit	Unidirectional					
Type of drive installed	Variable speed					
Type of heat recovery system	None					
Maximum flow rate (m³/h)	176					
Electric power input (W)	18					
Reference flow rate (m³/s)	0.036					
Reference pressure difference (Pa)	50					
Specific power input (SPI) (W/(m³/h))	0.07					
Control typology	Local demand control					
Maximum external leakage rates (%)	2.7					
Sound power level (dB(A))	38					
The annual electricity consumption (AEC) (kWh/a)	Cold		Average		Warm	
	37		37		37	
The annual heating saved (AHS) (kWh/a)	Cold		Average		Warm	
	5536		2830		1280	