SKRA 600x300/24

Mixing chambers for mixing (recirculating) part of the exhaust air with the outdoor air in the appropriate proportion

- Casing material: Galvanized steel



	Unit of measurement	SKRA 600x300/24
Minimum supply voltage	V	24
Maximum supply voltage	V	24
Weight	kg	36

Dimensions

B	B1	B2	B3	H	H1	H2	L
600	620	1340	1360	300	320	340	490

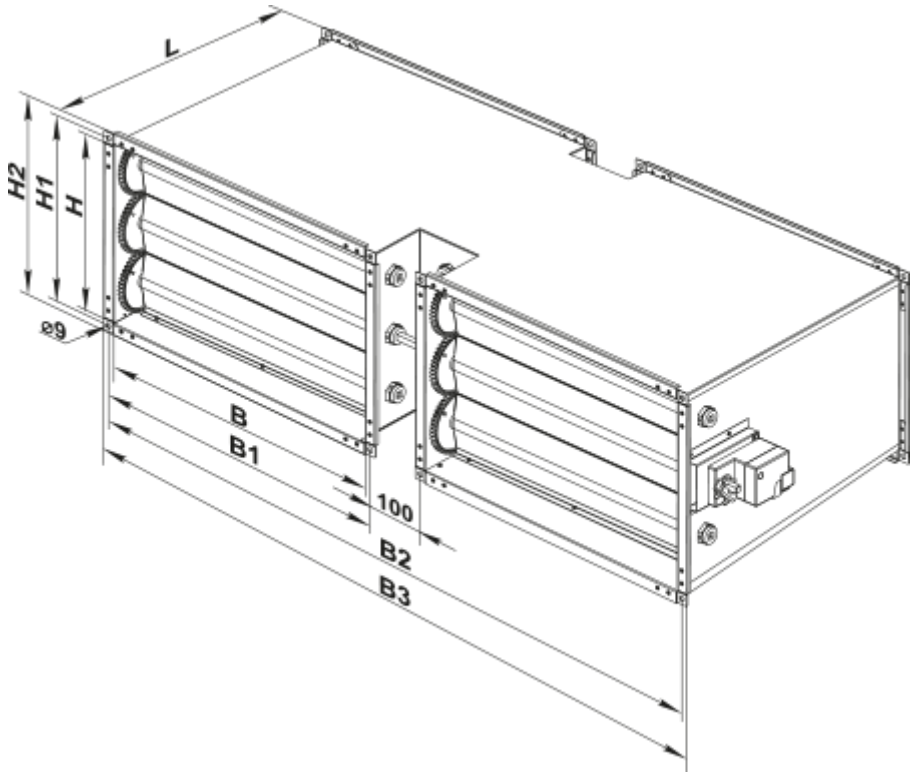
L
H2
H1
H
ø9
B
B1
100
B2
B3