Saddle 900/560

Saddle for straight air duct segment



	Unit of measurement	Saddle 900/560

Dimensions

d1	d2	l
560	900	100

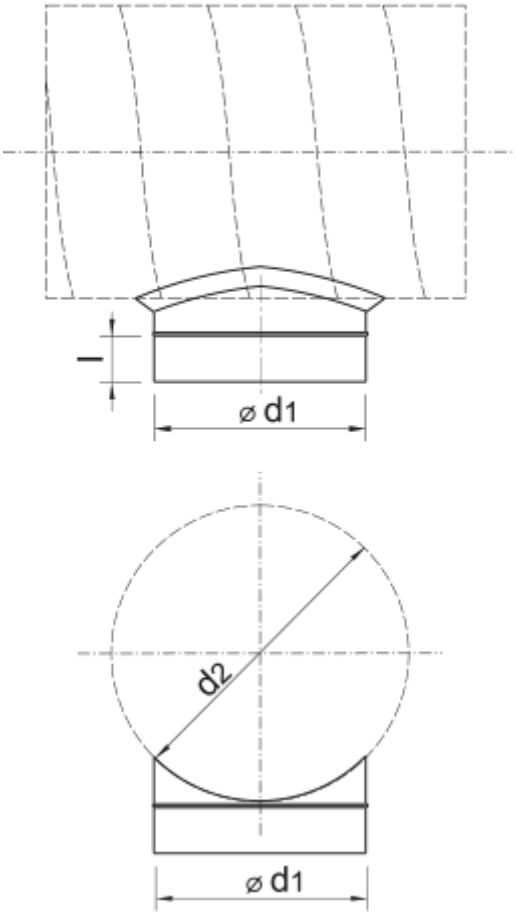
l
⌀ d1
d2
⌀ d1