Saddle 800/800

Saddle for straight air duct segment



	Unit of measurement	Saddle 800/800

Dimensions

d1	d2	l
800	800	80

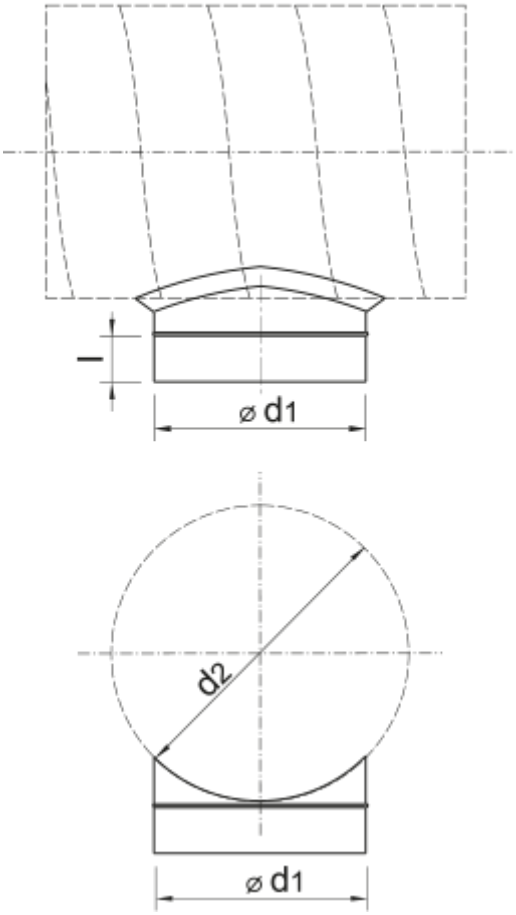
l
⌀ d1
d2
⌀ d1