Saddle 500/224

Saddle for straight air duct segment



	Unit of measurement	Saddle 500/224

Dimensions

d1	d2	l
224	500	60

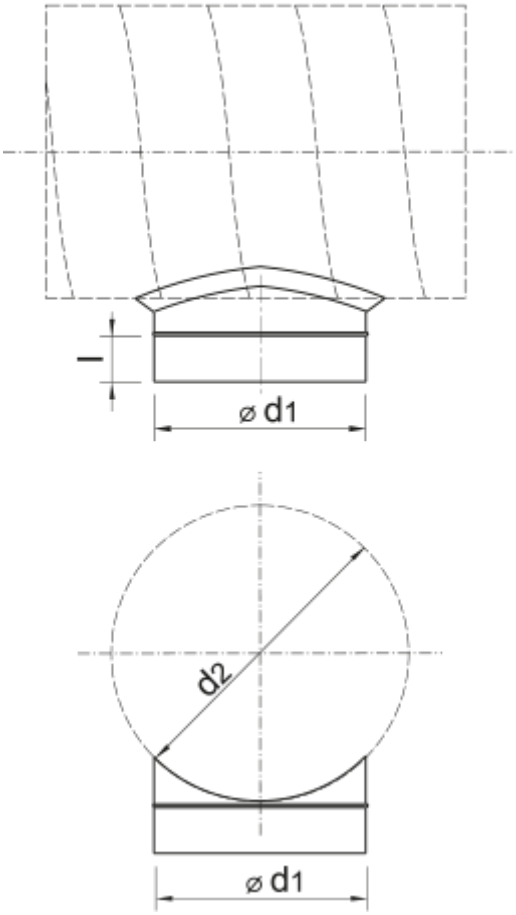
l
⌀ d1
d2
⌀ d1