Saddle 450/224

Saddle for straight air duct segment



	Unit of measurement	Saddle 450/224

Dimensions

d1	d2	l
224	450	60

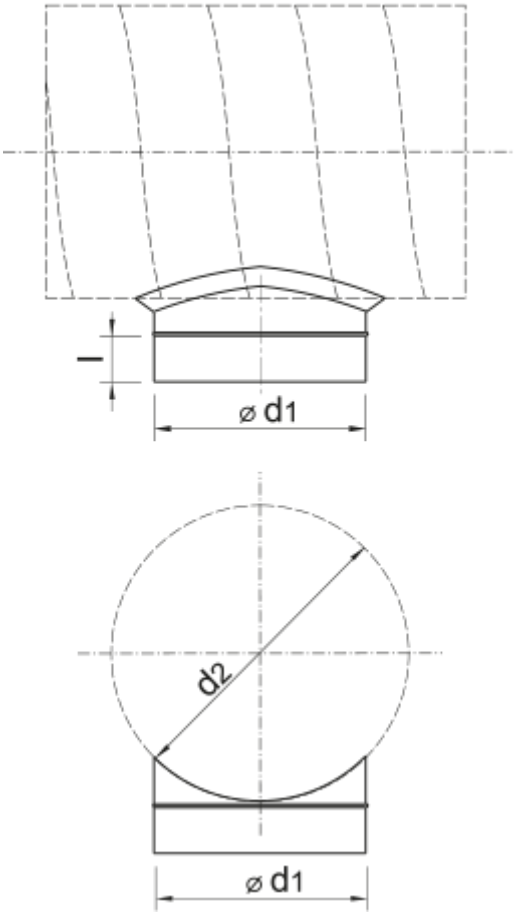
l
⌀ d1
d2
⌀ d1