Saddle 355/315

Saddle for straight air duct segment



	Unit of measurement	Saddle 355/315

Dimensions

d1	d2	l
315	355	60

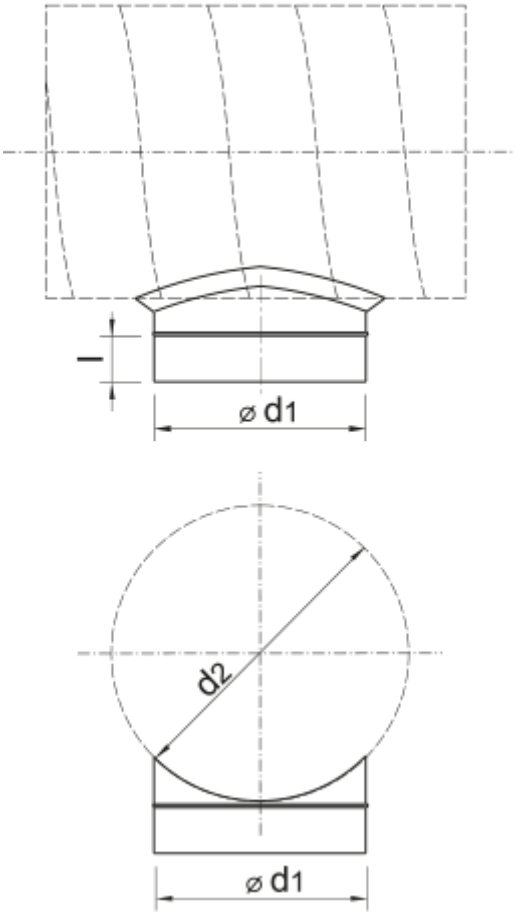
l
⌀ d1
d2
⌀ d1