Saddle 355/125

Saddle for straight air duct segment



	Unit of measurement	Saddle 355/125

Dimensions

d1	d2	l
125	355	60

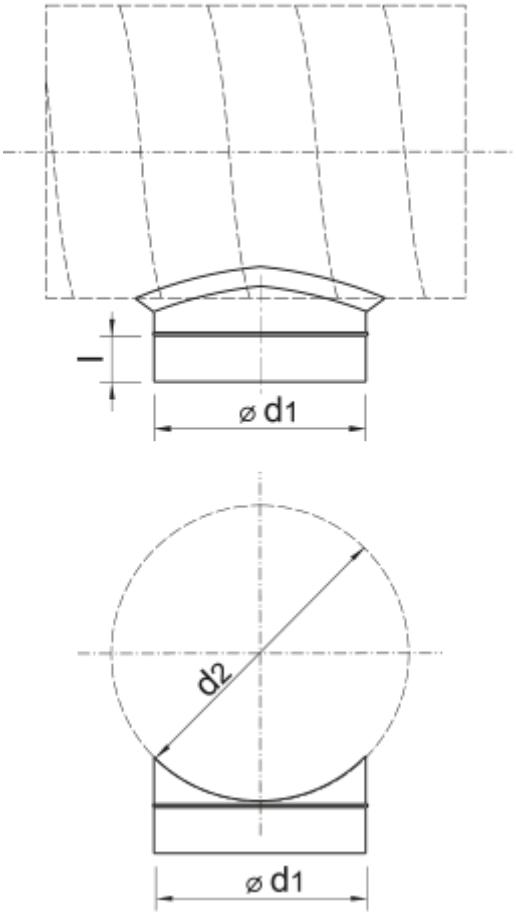
l
⌀ d1
d2
⌀ d1