# Saddle 224/200

Saddle for straight air duct segment



| | Unit of measurement | Saddle 224/200 |
|---|---|---|

## Dimensions

| d1 | d2 | l |
|---|---|---|
| 200 | 224 | 50 |

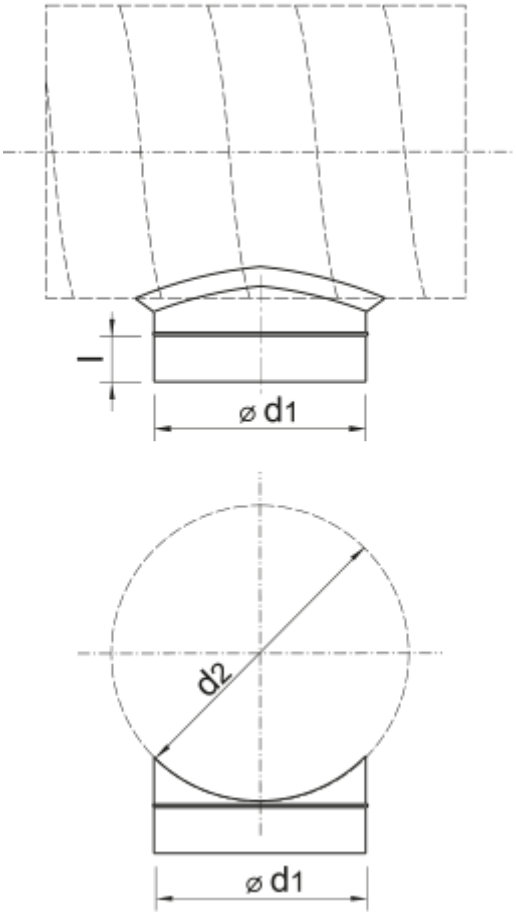
l
⌀ d1
d2
⌀ d1