Saddle 224/150

Saddle for straight air duct segment



	Unit of measurement	Saddle 224/150

Dimensions

d1	d2	l
150	224	50

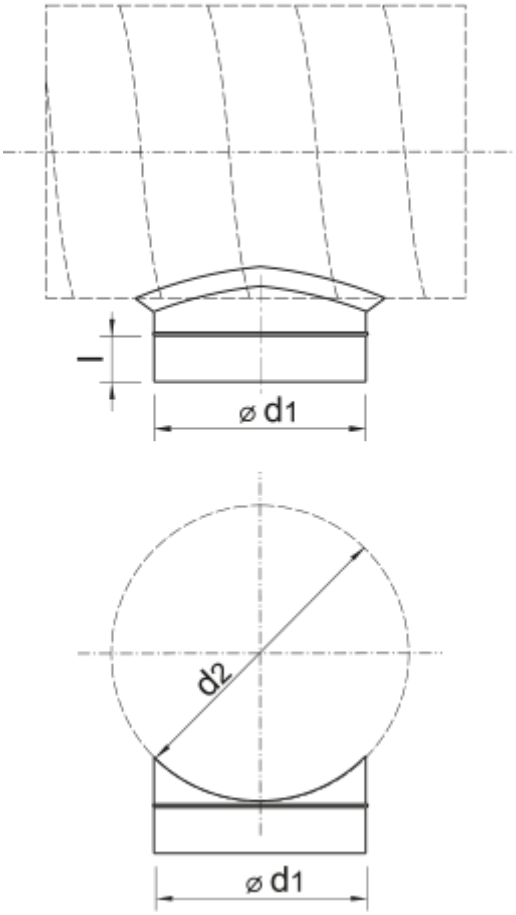
l
⌀ d1
d2
⌀ d1