Saddle 1250/1120

Saddle for straight air duct segment



	Unit of measurement	Saddle 1250/1120

Dimensions

d1	d2	l
1120	1250	100

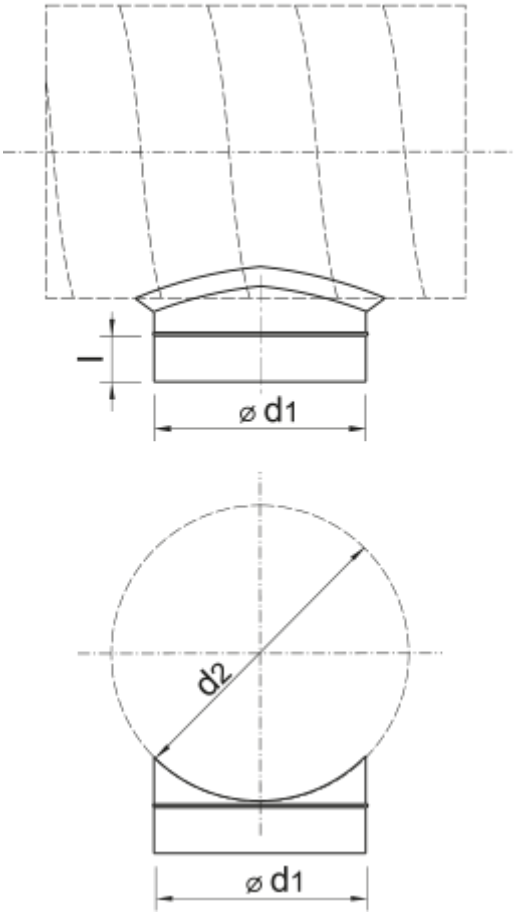
l
⌀ d1
d2
⌀ d1