Saddle 125/125

Saddle for straight air duct segment



	Unit of measurement	Saddle 125/125

Dimensions

d1	d2	l
125	125	50

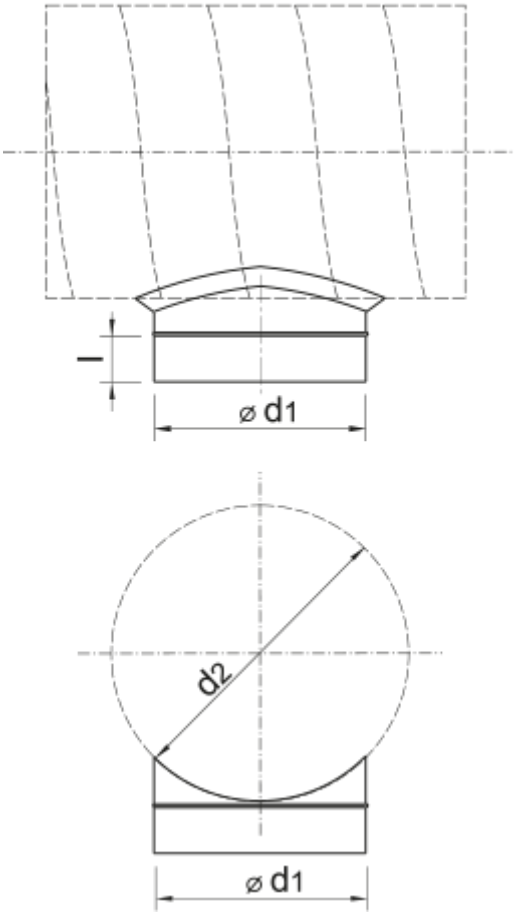
l
⌀ d1
d2
⌀ d1