Saddle 1000/630

Saddle for straight air duct segment



	Unit of measurement	Saddle 1000/630

Dimensions

d1	d2	l
630	1000	100

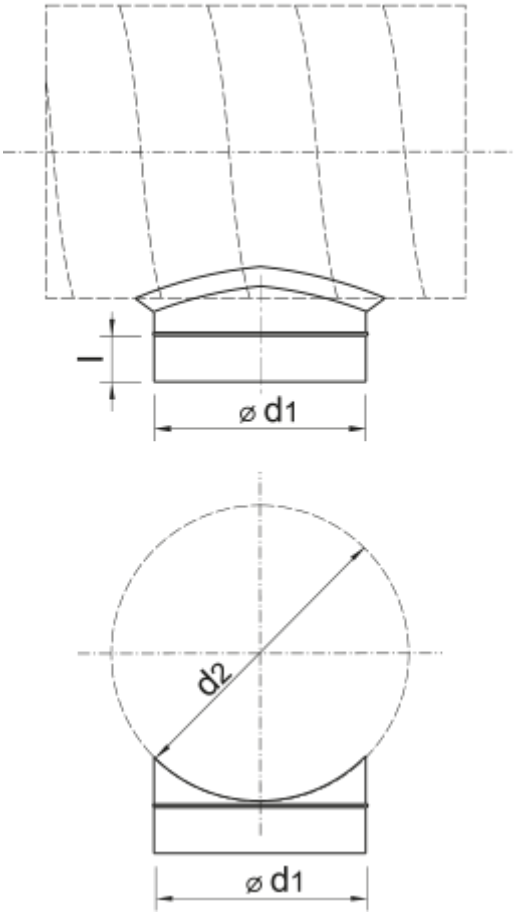
l
⌀ d1
d2
⌀ d1