RRV 700x400

Air flow controllers

- Casing material: Galvanized steel



	Unit of measurement	RRV 700x400
Weight	kg	7.7

Dimensions

B	B1	B2	B3	H	H1	H2	L
700	720	740	840	400	420	440	170

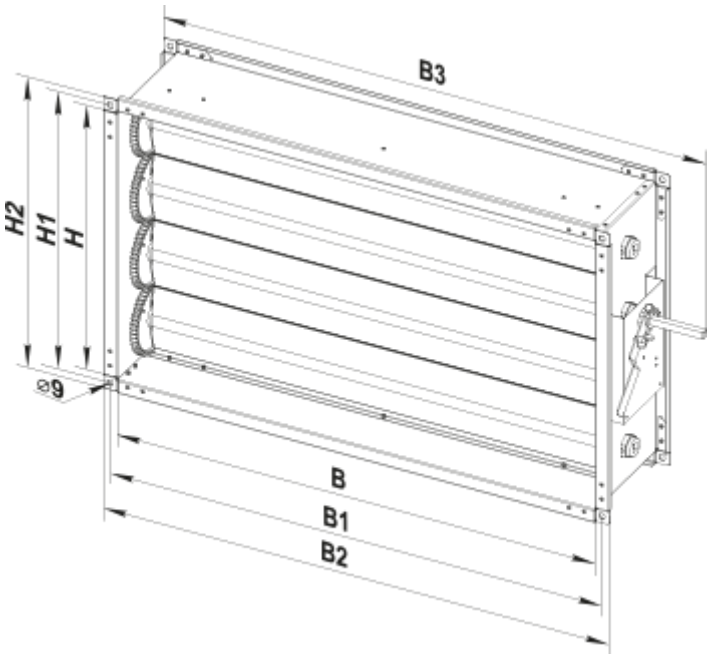
B3
H2
H1
H
⌀9
B
B1
B2