RRV 600x350

Air flow controllers

- Casing material: Galvanized steel



	Unit of measurement	RRV 600x350
Weight	kg	5.7

Dimensions

B	B1	B2	B3	H	H1	H2	L
600	620	640	740	350	370	390	170

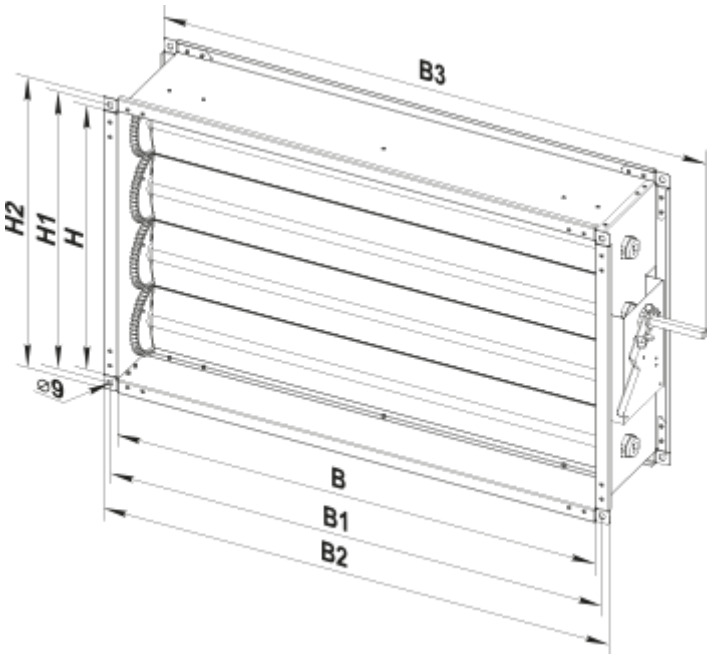
B3
H2
H1
H
⌀9
B
B1
B2