RRV 600x300

Air flow controllers

- Casing material: Galvanized steel



	Unit of measurement	RRV 600x300
Weight	kg	5.4

Dimensions

B	B1	B2	B3	H	H1	H2	L
600	620	640	740	300	320	340	170

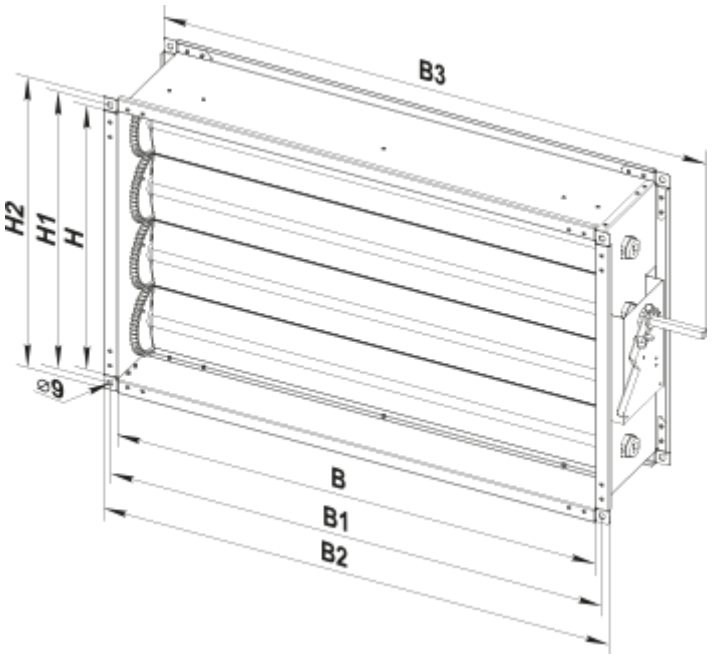
B3
H2
H1
H
⌀9
B
B1
B2