RRV 500x250

Air flow controllers

- Casing material: Galvanized steel



	Unit of measurement	RRV 500x250
Weight	kg	4.2

Dimensions

B	B1	B2	B3	H	H1	H2	L
500	520	540	640	250	270	290	170

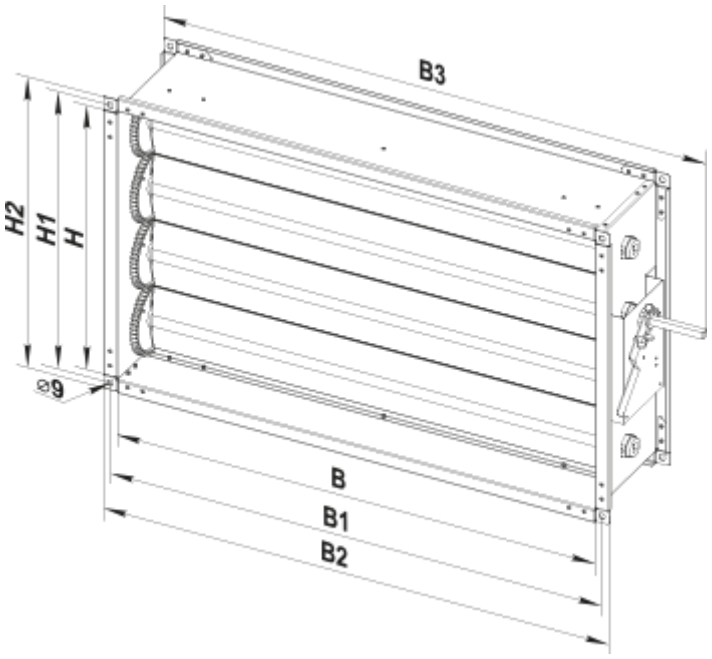
B3
H2
H1
H
⌀9
B
B1
B2