RRV 400x200

Air flow controllers

- Casing material: Galvanized steel



	Unit of measurement	RRV 400x200
Weight	kg	3.5

Dimensions

B	B1	B2	B3	H	H1	H2	L
400	420	440	540	200	220	240	170

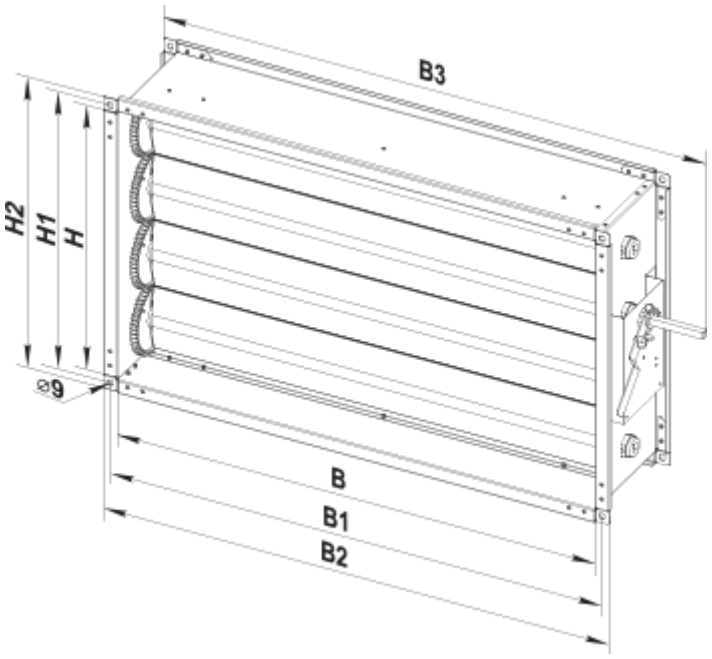
B3
H2
H1
H
⌀9
B
B1
B2