RO 100 black



Round axial extract fans

- Sound pressure level LpA at 3 m: 33
- Casing material: Plastic
- Backdraft protection: Backdraft damper

	Unit of measurement	RO 100 black
Connected air duct size	mm	100
Phases	-	1
Maximum supply voltage	V	240
Minimum supply voltage	V	220
Power supply frequency	Hz	50/60
Rated power	W	14
Unit current	A	0.09
Maximum airflow	m^3/h	92
Rotation speed at 50hz	-	2300
Sound pressure level LpA at 3 m	dB(A)	33
Weight	kg	0.6
Ambient air temperature min	°C	1
Ambient air temperature max	°C	45
Ingress protection rating	-	IP24
Impeller material	-	Plastic

Dimensions

Ø D	Ø D1	L	L1
100	172	121	88

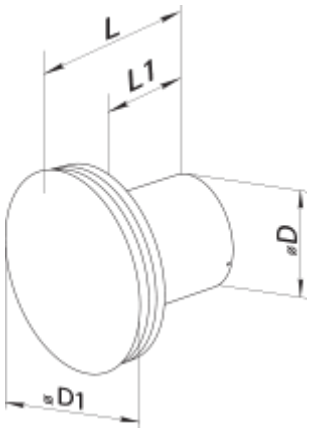

Ecodesign

Trademark	Vents					
Model	RO 100 black					
Specific energy consumption (SEC) (kWh/(m²/a))	Cold		Average		Warm	
	-28.8	B	-12.4	E	-3	F
Type of ventilation unit	Unidirectional					
Type of drive installed	Single speed					
Type of heat recovery system	None					
Maximum flow rate (m³/h)	92					
Electric power input (W)	14					
Reference flow rate (m³/s)	0.018					
Specific power input (SPI) (W/(m³/h))	0.152					
Control typology	Manual control					
Maximum external leakage rates (%)	2.7					
Sound power level (dB(A))	53					
Declared typology	RVU UVU					
The annual electricity consumption (AEC) (kWh/a)	Cold		Average		Warm	
	191		191		191	
The annual heating saved (AHS) (kWh/a)	Cold		Average		Warm	
	3355		1715		776	