RKVI 900

Mounting frame with thermal-insulating layer

• Casing material: Galvanized steel

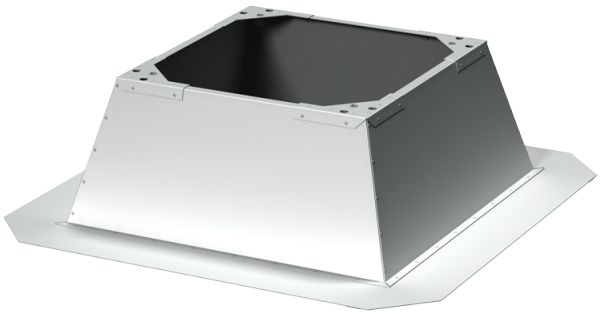

	Unit of measurement	RKVI 900
Weight	kg	113

Dimensions

B	B1	H	L	L1
1512	1150	650.0	1212	1050

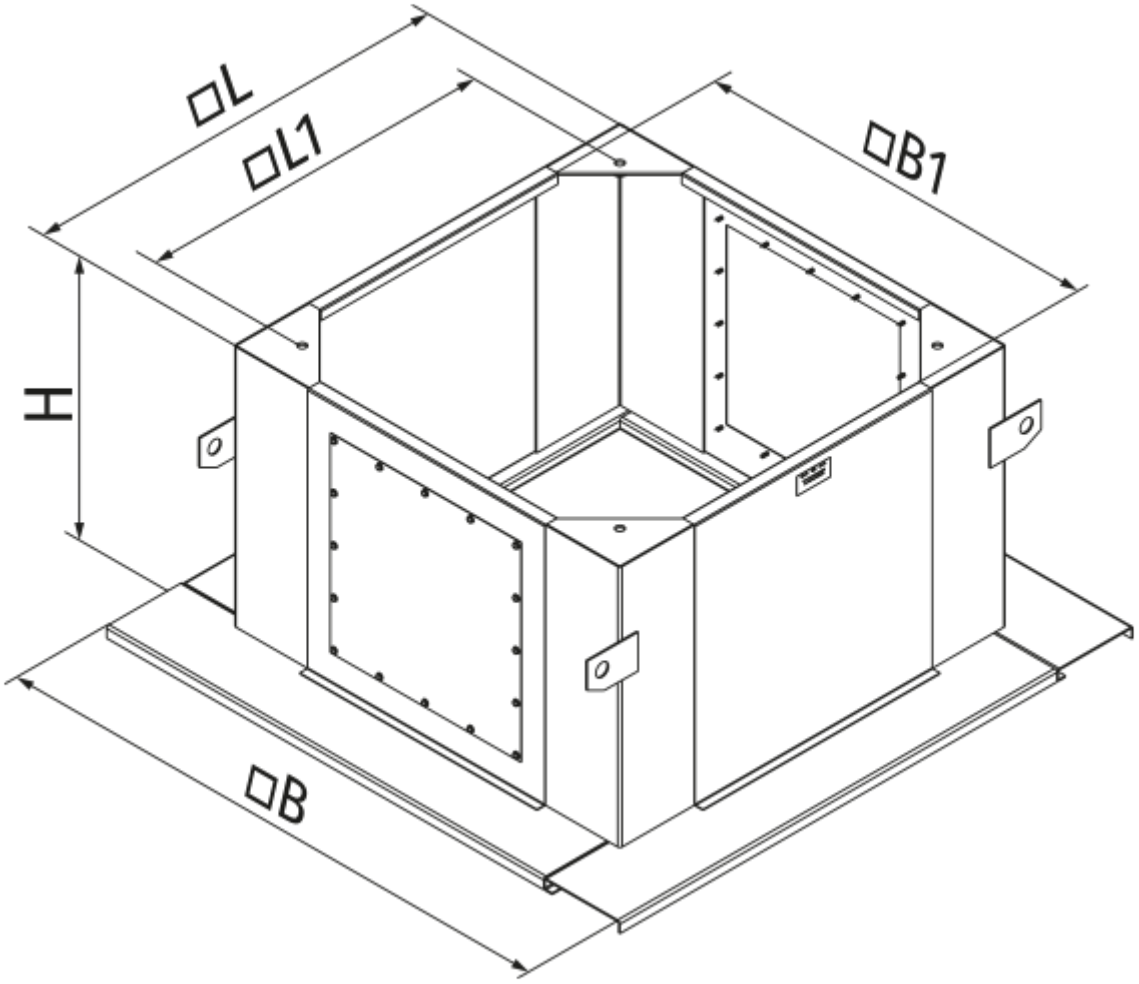
□L
□L1
□B1
H
□B