RKVI 710, 800

Mounting frame with thermal-insulating layer

• Casing material: Galvanized steel

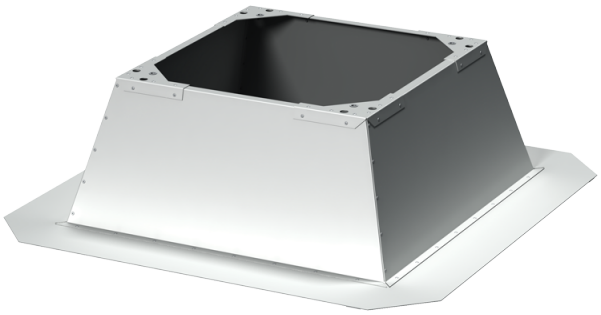

	Unit of measurement	RKVI 710, 800
Weight	kg	89

Dimensions

B	B1	H	L	L1
1262	900	600.0	962	840

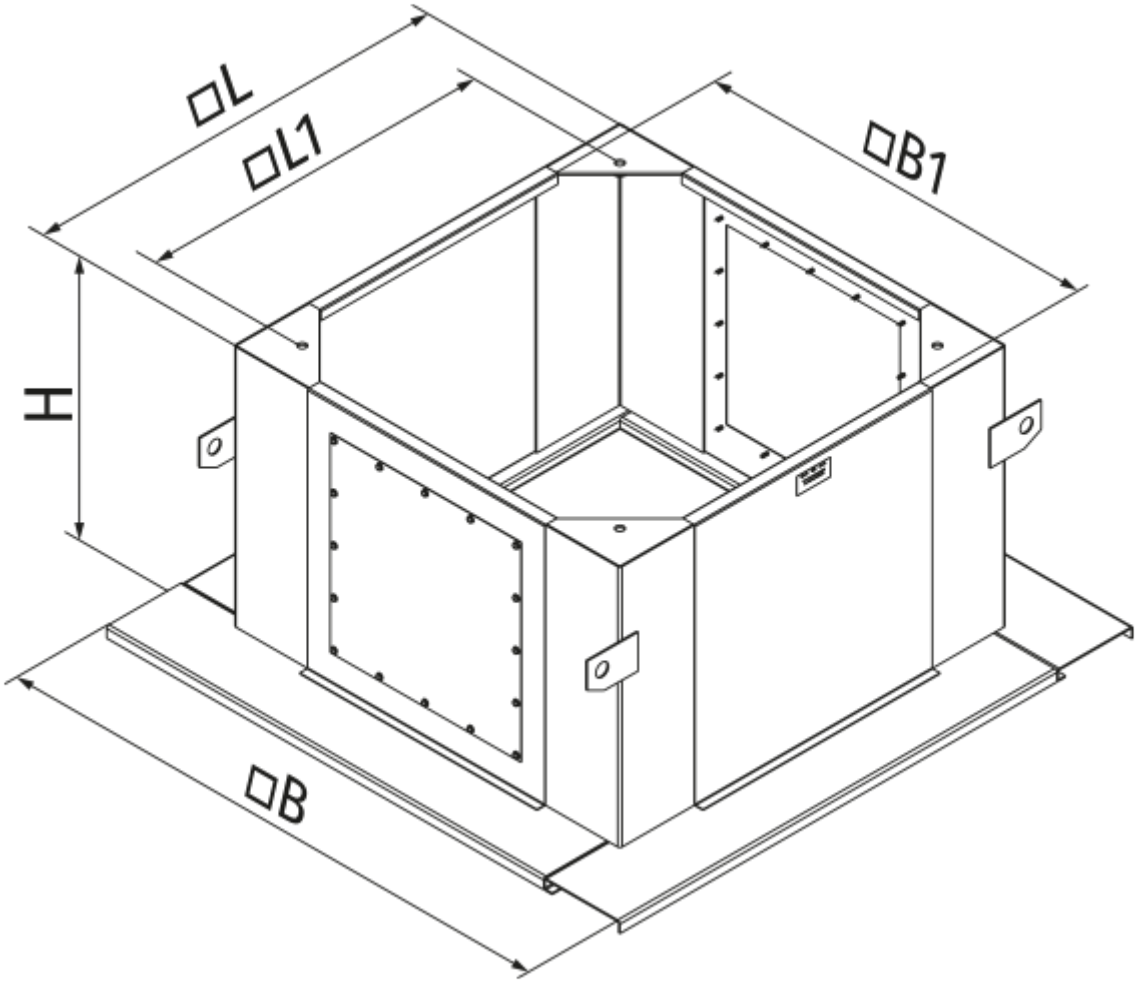
□L
□L1
□B1
H
□B