RKV 900

Mounting frame

- Casing material: Galvanized steel

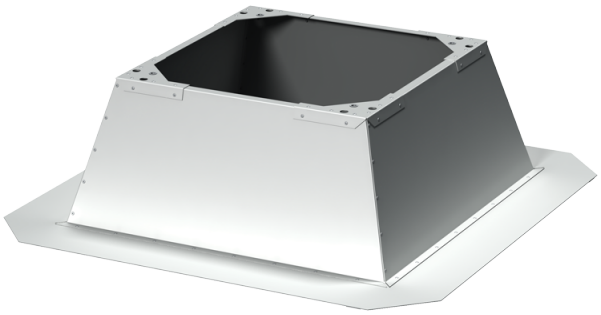

	Unit of measurement	RKV 900
Weight	kg	85.7

Dimensions

B	B1	H	L	L1
1512	1152	650.0	1212	1050

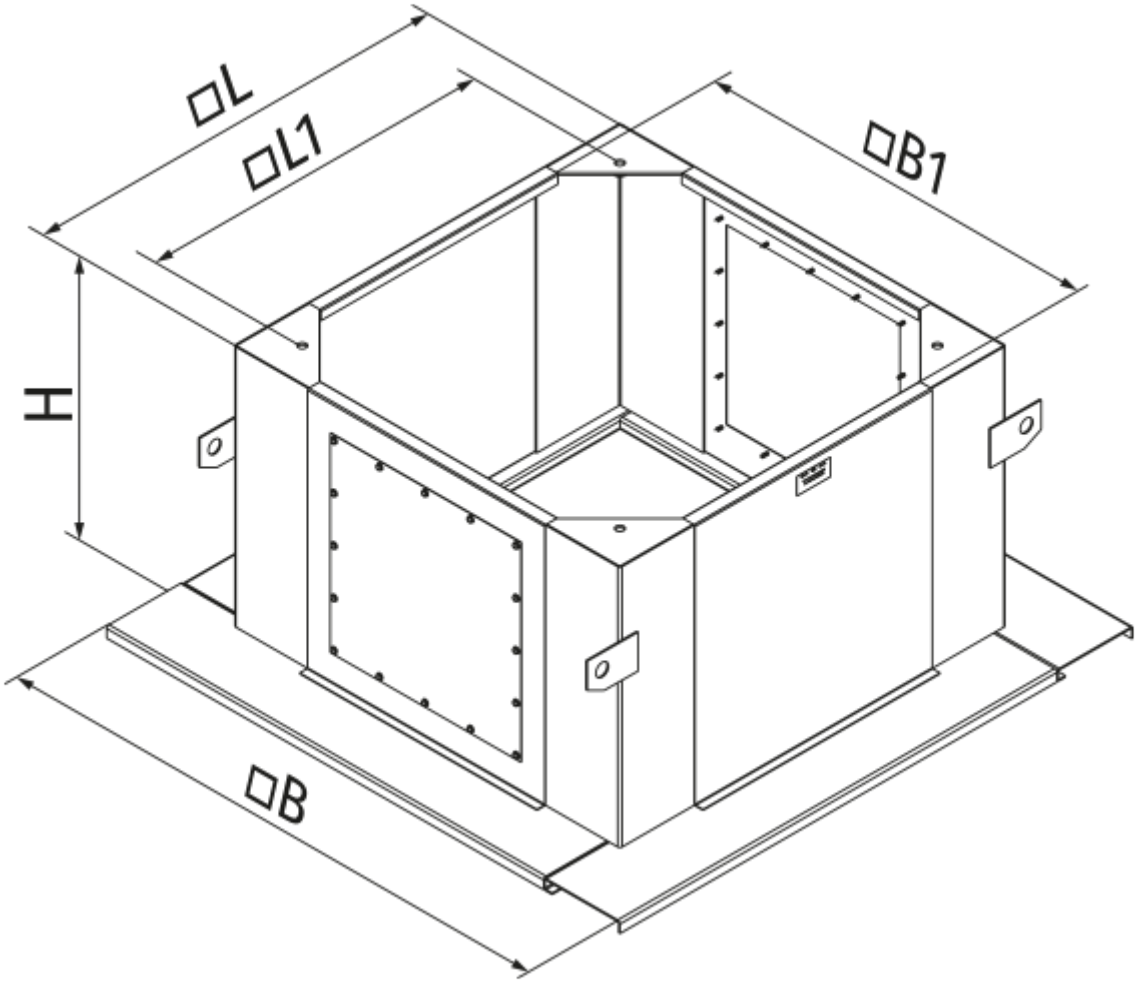
□L
□L1
□B1
H
□B