RKV 355-400

Mounting frame

- Casing material: Galvanized steel

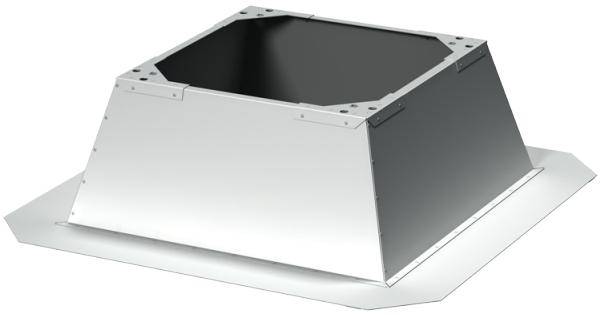

	Unit of measurement	RKV 355-400
Weight	kg	16.4

Dimensions

B	B1	H	L	L1
980	506	300.5	561	450

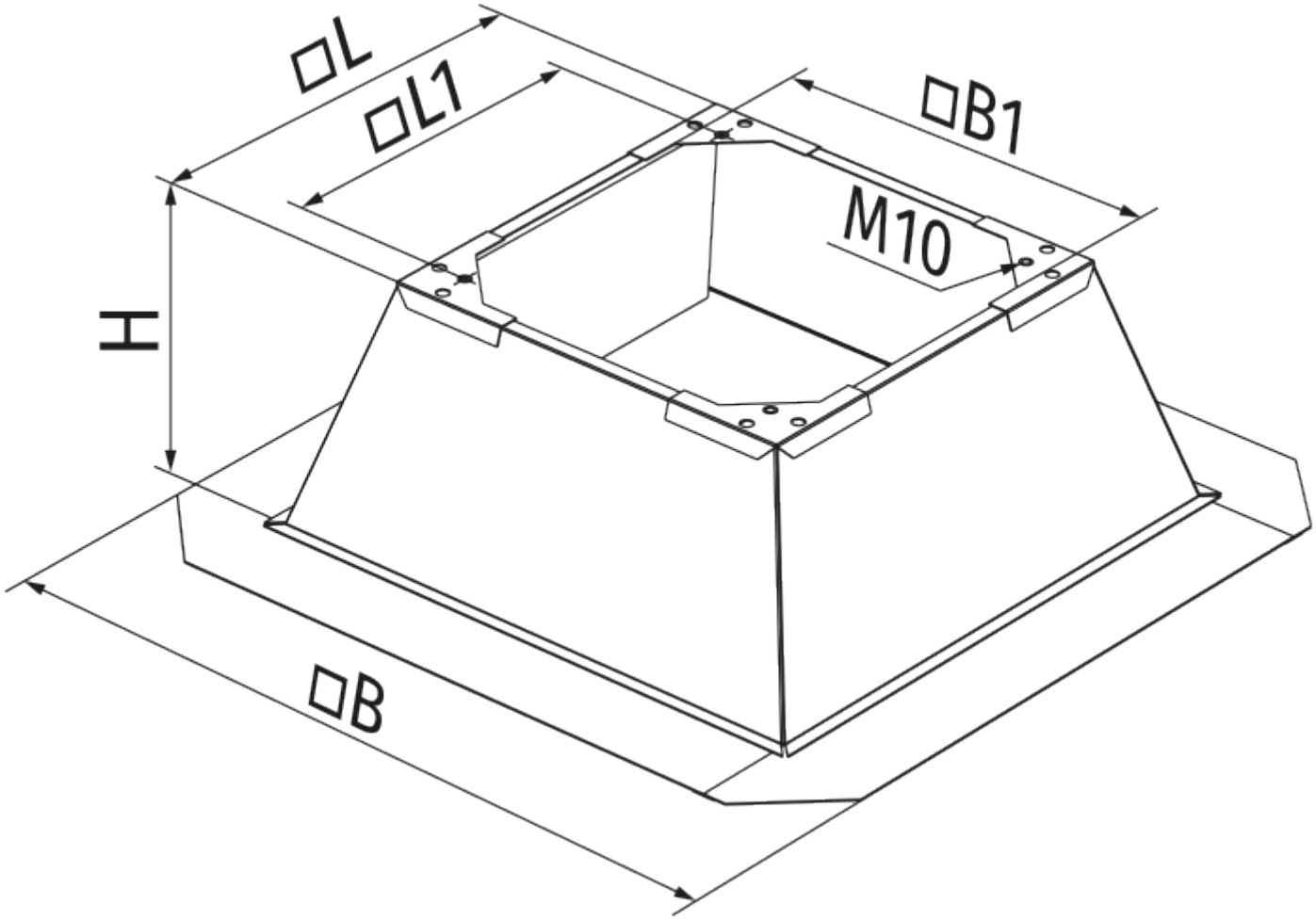
□L
□L1
□B1
M10
H
□B