RKV 250-315

Mounting frame

- Casing material: Galvanized steel

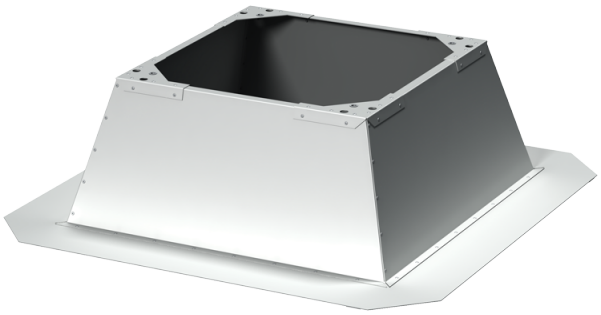

	Unit of measurement	RKV 250-315
Weight	kg	12

Dimensions

B	B1	H	L	L1
810	352	300.5	401	330

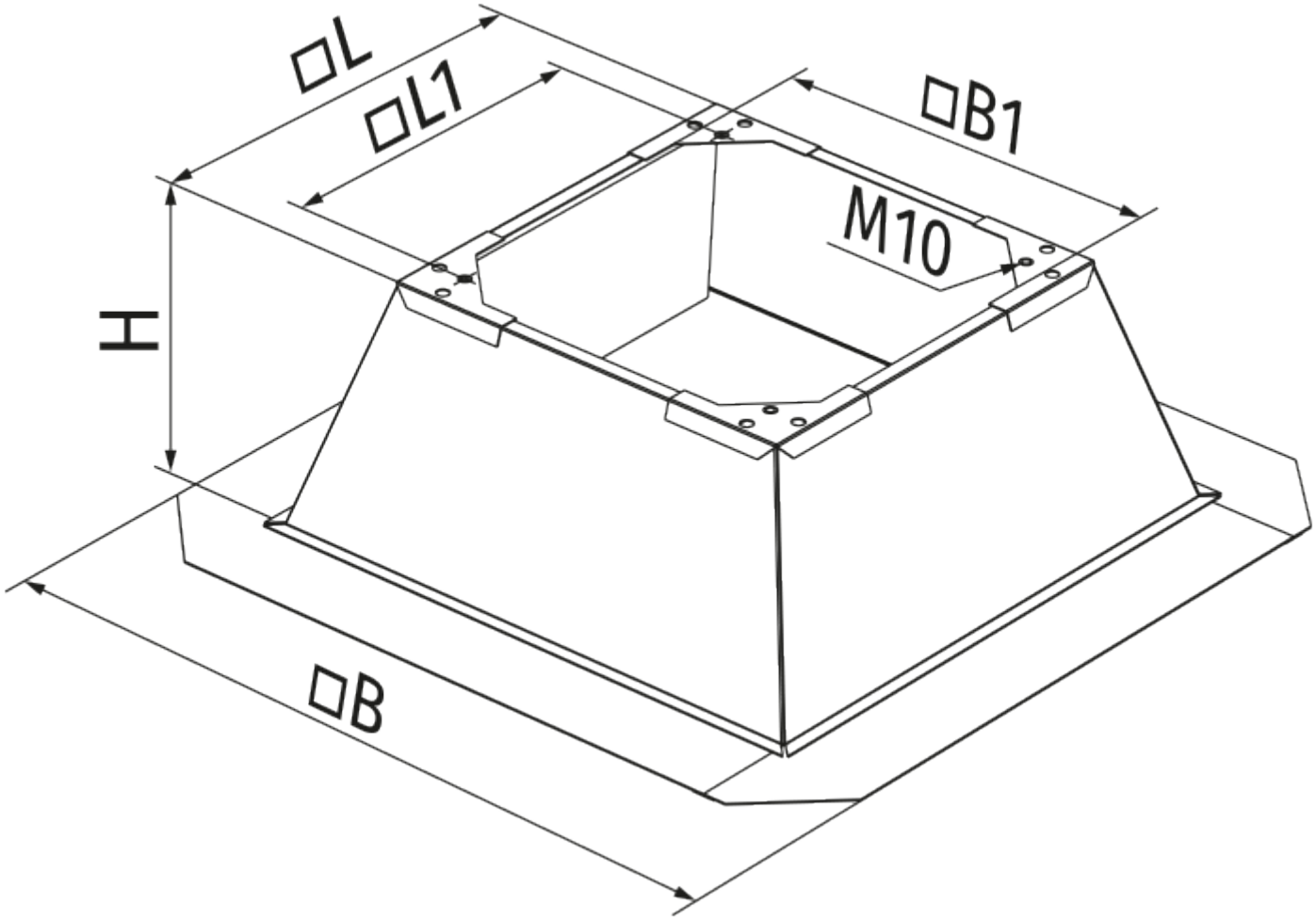
□L
□L1
□B1
M10
H
□B